CITY OF GRAIN VALLEY BOARD OF ALDERMEN
REGULAR MEETING AGENDA

APRIL 27, 2020
7:00 P.M.

OPEN TO THE PUBLIC VIA DIAL IN CONFERENCE CALL LINE
DIAL IN (253) 215-8782 | MEETING ID 980-8526-9316 | PASSCODE 036104

ITEM I: CALL TO ORDER
- Mayor Mike Todd

ITEM II: ROLL CALL
- City Clerk Jamie Logan

ITEM III: APPROVAL OF AGENDA
- City Administrator Ken Murphy

ITEM IV: PROCLAMATIONS
- None

ITEM V: CONSENT AGENDA
- March 23, 2020 – Board of Aldermen Regular Meeting Minutes
- April 13, 2020 – Accounts Payable
- April 27, 2020 – Accounts Payable

ITEM VI: PREVIOUS BUSINESS
- None

ITEM VII: NEW BUSINESS
- Fireworks Permit
    - Grain Valley Band Parent's Association
    - Grain Valley Partnership
- Liquor License
    - Quik Trip

ITEM VIII: PRESENTATIONS
- None

ITEM IX: PUBLIC HEARING
- None

ITEM X: ORDINANCES

ITEM X(A)
B20-09
2ND READ

An Ordinance Approving Redevelopment Project 1B of the Grain Valley Interchange Tax Increment Financing Plan as a Redevelopment Project and Adopting Tax Increment Financing Therein

To approve redevelopment Project 1B

ITEM X (B)
B20-10
2ND READ

An Ordinance Approving Redevelopment Project 3 of the Grain Valley Interchange Tax Increment Financing Plan as a Redevelopment Project and Adopting Tax Increment Financing Therein

To approve redevelopment Project 3

ITEM X (C)
B20-11
2ND READ

An Ordinance Approving Redevelopment Project 4 of the Grain Valley Interchange Tax Increment Financing Plan as A Redevelopment Project and Adopting Tax Increment Financing Therein

To approve redevelopment Project 4

ITEM XI: RESOLUTIONS

ITEM XI (A)
R20-24

A Resolution by the Board of Aldermen of the City of Grain Valley, Missouri Authorizing the City Administrator to Purchase Equipment and Materials for the Installation of a Fixed Base Meter Reading System and Computer Software

To read water meters routinely with no interruptions for utility billing purposes and to provide the best possible customer service

ITEM XI (B)
R20-25

A Resolution by the Board of Aldermen of the City of Grain Valley Authorizing the City Administrator to Sign an Agreement with Jackson County, Missouri for Distribution of Combat Funds of $82,500.00 for the 2020 Fiscal Year

To collect payment from Jackson County, Missouri's Combat Tax (Anti-Drug Sales Tax) in the amount of $82,500.00

ITEM XI (C)
R20-26

A Resolution by the Board of Aldermen of the City of Grain Valley, Missouri Authorizing the City Administrator to Lease a Skid Steer for the Public Works Division to Complete Routine Tasks and Projects

To have equipment available to perform routine tasks in the Public Works Division for public services

ITEM XI (D)
R20-27

A Resolution by the Board of Aldermen of the City of Grain Valley Authorizing the City Administrator to Execute an Agreement with Blue Nile Contractors, Inc. for the Dillingham Water Main and Trail

To construct a water main loop serving Rosewood Hills Estates area and extend the existing trail on Dillingham Road from Persimmon Drive to Lindenwood Drive and connect existing trail segments completing this section to the northern City Limits

ITEM XI (E)
R20-28

A Resolution Authorizing the City Administrator to Approve the Midwest Public Risk (MPR) 2020-2021 Plan Elections and Rates for Employee Health, Dental and Vision Benefit Coverage

To provide health, dental and vision insurance coverage to City of Grain Valley employees and their families

ITEM XII: CITY ATTORNEY REPORT

- City Attorney

ITEM XIII: CITY ADMINISTRATOR & STAFF REPORTS

- City Administrator Ken Murphy
- Deputy City Administrator Theresa Osenbaugh
- Chief of Police James Beale
- Finance Director Steven Craig
- Parks & Recreation Director Shannon Davies
- Community Development Director Mark Trosen
- City Clerk Jamie Logan

ITEM XIV: BOARD OF ALDERMEN REPORTS & COMMENTS

- Alderman Shea Bass
- Alderman Tom Cleaver
- Alderman Bob Headley
- Alderman Jayci Stratton
- Alderman Nancy Totton
- Alderman Yolanda West

ITEM XV: MAYOR REPORT

- Mayor Mike Todd

ITEM XVI: EXECUTIVE SESSION

- Legal Actions, Causes of Action of Litigation Pursuant to Section 610.021(1), RSMo. 1998, as Amended
- Leasing, Purchase or Sale of Real Estate Pursuant to Section 610.021(2), RSMo. 1998, as Amended
- Hiring, Firing, Disciplining or Promoting of Employees (personnel issues), Pursuant to Section 610.021(3), RSMo. 1998, as Amended
- Sealed bids and related documents, until the bids are opened; and sealed proposals and related documents to a negotiated contract until a contract is executed, or all proposals are rejected, Pursuant to Section 610.021(12), RSMo. 1998, as Amended
- Individually Identifiable Personnel Records, Personnel Records, Performance Ratings or Records Pertaining to Employees or Applicants for Employment, Pursuant to Section 610.021(13), RSMo 1998, as Amended.

ITEM XVII: ADJOURNMENT

PLEASE NOTE

PERSONS REQUIRING AN ACCOMMODATION TO PARTICIPATE IN THE MEETING SHOULD CONTACT THE CITY CLERK AT 816.847.6211 AT LEAST 48 HOURS BEFORE THE MEETING

THE CITY OF GRAIN VALLEY IS INTERESTED IN EFFECTIVE COMMUNICATION FOR ALL PERSONS

UPON REQUEST, THE MINUTES FROM THIS MEETING CAN BE MADE AVAILABLE BY CALLING 816.847.6211

Consent Agenda

INTENTIONALLY LEFT BLANK

ITEM I: CALL TO ORDER

- The Board of Aldermen of the City of Grain Valley, Missouri, met in Regular Session on March 23, 2020 at 7:00 p.m. via video conference of the elected officials as a result of the social distancing rule due to the COVID-19 pandemic
- The meeting was called to order by Mayor Todd

ITEM II: ROLL CALL

- City Clerk Jamie Logan called roll
- *Present via video conference: Bass, Cleaver, Headley, Stratton, Totton, West*
- *Absent:*

-QUORUM PRESENT-

ITEM III: APPROVAL OF AGENDA

- No Changes

ITEM IV: CONSENT AGENDA

- March 9, 2020 – Board of Aldermen Regular Meeting Minutes
- March 23, 2020 – Accounts Payable
- *Alderman West made a Motion to Approve the Consent Agenda*
- *The Motion was Seconded by Alderman Cleaver*
    - No Discussion
- *Motion to Approve the Consent Agenda was voted on with the following voice vote:*
    - *Aye: Bass, Cleaver, Headley, Stratton, Totton, West*
    - *Nay: None*
    - *Abstain: None*

-MOTION APPROVED: 6-0-

ITEM V: PREVIOUS BUSINESS

- None

ITEM VI: NEW BUSINESS

- None

ITEM VII: PRESENTATIONS

- None

DRAFT

ITEM VIII: PUBLIC HEARING

- None

ITEM IX: ORDINANCES

Bill No. B20-06: An Ordinance Changing the Zoning on Approximately 1.2 Acres from Downtown Transition Zone to R-3P (Multi-Family Residential District-Planned Overlay District) and Approximately 1.9 Acres from C-1 (Central Business District) to R-3P (Multi-Family Residential District-Planned Overlay District) and Approval of Preliminary Development Plan for the Lofts at Old Towne Marketplace

- *Alderman Headley moved to bring up Bill No. B20-06 for it second reading*
- *The Motion was Seconded by Alderman Stratton*
    - Change in zoning for old grocery store and some of the vacant land around there to put in an apartment complex
- *The motion was voted on with the following voice vote:*
    - *Aye: Bass, Cleaver, Headley, Stratton, Totton, West*
    - *Nay:*
    - *Abstain:*

Bill No. B20-06: An Ordinance Changing the Zoning on Approximately 1.2 Acres from Downtown Transition Zone to R-3P (Multi-Family Residential District-Planned Overlay District) and Approximately 1.9 Acres from C-1 (Central Business District) to R-3P (Multi-Family Residential District-Planned Overlay District) and Approval of Preliminary Development Plan for the Lofts at Old Towne Marketplace

Bill No. B20-06 was read by City Attorney Joe Lauber

- *Alderman Headley moved to accept the second reading of Bill No. B20-06 making it ordinance #2496*
- *The Motion was Seconded by Alderman Stratton*
- *The motion was voted on with the following roll call vote:*
    - *Aye: Bass, Cleaver, Headley, Stratton, Totton, West*
    - *Nay:*
    - *Abstain:*

DRAFT

-Bill No. B20-06 BECAME ORDINANCE #2496: 6-0

Bill No. B20-07: An Ordinance Authorizing the City of Grain Valley, Missouri Equipment Lease Purchase Agreement and Authorizing and Approving Certain Documents in Connection with the Delivery of the Lease

- *Alderman Headley moved to make the first reading by title only of Bill No. B20-07*
- *The Motion was Seconded by Alderman Cleaver*
    - *This was discussed during budget time and determined lease purchase option; since then another vehicle has been totaled and will be purchasing the third using insurance proceeds; requesting a double read tonight*
- *Motion to make the first reading of Bill No. B20-07 was voted upon with the following voice vote:*
    - *Aye: Bass, Cleaver, Headley, Stratton, Totton, West*
    - *Nay: None*
    - *Abstain: None*

-Motion Approved: 6-0-

Bill No. B20-07 was read by City Attorney Joe Lauber

Bill No. B20-07: An Ordinance Authorizing the City of Grain Valley, Missouri Equipment Lease Purchase Agreement and Authorizing and Approving Certain Documents in Connection with the Delivery of the Lease

- *Alderman Headley moved to accept the first reading of Bill No. B20-07 bringing it back for a second reading by title only*
- *The Motion was Seconded by Alderman Cleaver*
- *The motion was voted on with the following voice vote:*
    - *Aye: Bass, Cleaver, Headley, Stratton, Totton, West*
    - *Nay: None*
    - *Abstain: None*

-Bill No. B20-07 Approved for a Second Reading: 6-0-

Bill No. B20-07: An Ordinance Authorizing the City of Grain Valley, Missouri Equipment Lease Purchase Agreement and Authorizing and Approving Certain Documents in Connection with the Delivery of the Lease

DRAFT

Bill No. B20-07 was read by City Attorney Joe Lauber

- *Alderman Headley moved to accept the second reading of Bill No. B20-07 making it ordinance #2497*
- *The Motion was Seconded by Alderman Bass*
  - No Discussion
- *The motion was voted on with the following roll call vote:*
  - *Aye: Bass, Cleaver, Headley, Stratton, Totton, West*
  - *Nay:*
  - *Abstain:*
- *The motion was voted on with the following roll call vote:*
  - *Aye: Bass, Cleaver, Headley, Stratton, Totton, West*
  - *Nay:*
  - *Abstain:*

-Bill No. B20-07 BECAME ORDINANCE #2497: 6-0

Bill No. B20-08: An Ordinance Relating to Emergency Preparedness and Emergencies in the City of Grain Valley

- *Alderman Headley moved to make the first reading by title only of Bill No. B20-08*
- *The Motion was Seconded by Alderman Stratton*
  - *Put something in place for certain situations where the mayor can declare a state of emergency; piece of framework a city should have going forward and available for use*
- *Motion to make the first reading of Bill No. B20-08 was voted upon with the following voice vote:*
  - *Aye: Bass, Cleaver, Headley, Stratton, Totton, West*
  - *Nay: None*
  - *Abstain: None*

-Motion Approved: 6-0-

Bill No. B20-08 was read by City Attorney Joe Lauber

DRAFT

Bill No. B20-08: An Ordinance Relating to Emergency Preparedness and Emergencies in the City of Grain Valley

- *Alderman Headley moved to accept the first reading of Bill No. B20-08 bringing it back for a second reading by title only*
- *The Motion was Seconded by Alderman Stratton*
- *The motion was voted on with the following voice vote:*
  - *Aye: Bass, Cleaver, Headley, Stratton, Totton, West*
  - *Nay: None*
  - *Abstain: None*

-Bill No. B20-08 Approved for a Second Reading: 6-0-

Bill No. B20-08: An Ordinance Relating to Emergency Preparedness and Emergencies in the City of Grain Valley

Bill No. B20-08 was read by City Attorney Joe Lauber

- *Alderman Headley moved to accept the second reading of Bill No. B20-08 making it ordinance #2498*
- *The Motion was Seconded by Alderman Cleaver*
  - No Discussion
- *The motion was voted on with the following roll call vote:*
  - *Aye: Bass, Cleaver, Headley, Stratton, Totton, West*
  - *Nay:*
  - *Abstain:*

-Bill No. B20-08 BECAME ORDINANCE #2498: 6-0

ITEM X: PROCLAMATIONS

- Interim City Administrator Ken Murphy read the Emergency Government Proclamation of State of Emergency

DRAFT

ITEM XI: RESOLUTIONS

Resolution No. R20-23: A Resolution by the Board of Aldermen of the City of Grain Valley, Missouri Authorizing the Interim City Administrator to Enter into an Agreement with Utility Service Company, Inc. to Provide Maintenance for City Owned Water Towers

- *Alderman Headley motioned to approve Resolution No. R20-23*
- *The Motion was Seconded by Alderman Totton*
  - *Yearly rotation for maintenance for the water towers and handles cleaning, inspections, maintenance, etc.; ongoing annual maintenance*
- *Resolution No. R20-23 was voted upon with the following voice vote:*
  - *Aye: Bass, Cleaver, Headley, Stratton, Totton, West*
  - *Nay: None*
  - *Abstain: None*

-Resolution No. R20-23 Approved: 6-0-

ITEM XII: CITY ATTORNEY REPORT

- Things are rapidly changed in respect to COVID-19 in respect to the pandemic; encourage those interested in learning more information www.mocities.com and there is a COVID response section & posted a section regarding stay at home order today

ITEM XIII: CITY ADMINISTRATOR & STAFF REPORTS

- Interim City Administrator Ken Murphy
  - The City has been on multiple conference calls trying to go through all of this; trying to put things on our social media pages and push information out as we get it.
- Interim Deputy City Administrator Theresa Osenbaugh
  - None
- Chief James Beale
  - None
- Finance Director Steven Craig
  - None
- Parks & Recreation Director Shannon Davies
  - First phase of trail completed and ribbon cutting postponed from tomorrow's original date
  -

DRAFT

- Community Development Director Mark Trosen
  - Printed report
- City Clerk Jamie Logan
  - None

ITEM XIV: BOARD OF ALDERMEN REPORTS & COMMENTS

- Alderman Shea Bass
  - None
- Alderman Tom Cleaver
  - Asked if we've issued masks and gloves to our officers for protection; Chief Beale said they are waiting on their mask order; and there is no estimated date for arrival as these items are in big demand right now
- Alderman Bob Headley
  - Thanked everyone for putting in extra work to get everything in place for the emergency orders
- Alderman Jayci Stratton
  - Thanked everyone for the extra work they are putting in; People are asking her if people need letters to go places or if they will be ticketed; It is not a requirement for cities to enforce anything put into place by the counties; Mr. Lauber said unless we have our own ordinance, we do not have anything in particular we need to do with exception of breaking up large gathering; Best source of information is to go to Jackson County's website and under their COVID response section; there is a FAQ section of how this will be done; County is expecting all to voluntarily comply; they will not require documentation for travel in the area
  - Asking what makes it necessary for a city to have a proclamation and how is the timing of these decided; Mr. Lauber shared that a city has received a direct hit with something – tornado, flooding; and that these can help pave the way to allow the mayor to take certain actions without waiting for a meeting and to react quickly in times of emergency; Many cities were not prepared for this across Missouri and many have responded very quickly and hopefully we can flatten that curve
- Alderman Nancy Totton
  - Said citizens are telling her they are receiving letters from their employers that they are required to go to work
- Alderman Yolanda West
  - None

DRAFT

ITEM XV: MAYOR REPORT

- Mayor Mike Todd
  - Two companies in town that make items helpful in a time like this; Liquid Soap is working to make hand sanitizers and Heartland Industries is making disinfectant sprays with hopes to be able to share these items in a drive thru service in the near future here in Grain Valley

ITEM XVI: EXECUTIVE SESSION

- None

ITEM XIX: ADJOURNMENT

- The meeting adjourned at 7:37 P.M.

Minutes submitted by:

_____ _____

Jamie Logan
City Clerk

Date

Minutes approved by:

_____ _____

Mike Todd
Mayor

Date

DRAFT

ELECTED OFFICIALS PRESENT	ELECTED OFFICIALS ABSENT	STAFF OFFICIALS PRESENT
Mayor Mike Todd		Interim City Administrator Ken Murphy
Alderman Shea Bass		Interim Deputy City Administrator Theresa Osenbaugh
Alderman Tom Cleaver		Chief James Beale
Alderman Bob Headley		Parks and Recreation Director Shannon Davies
Alderman Jayci Stratton		Community Development Director Mark Trosen
Alderman Nancy Totton		City Clerk Jamie Logan
Alderman Yolanda West		City Attorney Joe Lauber

DEPARTMENT	FUND	VENDOR NAME	DESCRIPTION	AMOUNT
NON-DEPARTMENTAL	GENERAL FUND	KCMO CITY TREASURER	KC EARNINGS TAX WH	41.64
		MO DEPT OF REVENUE	MISSOURI WITHHOLDING	2,255.73
			MISSOURI WITHHOLDING	100.00
		FRATERNAL ORDER OF POLICE	EMPLOYEE DEDUCTIONS	336.00
		HAMPEL OIL INC	CJC FUEL	510.91
			CJC FUEL	321.48
		AFLAC	AFLAC AFTER TAX	126.59
			AFLAC CRITICAL CARE	24.96
			AFLAC PRETAX	300.93
			AFLAC-W2 DD PRETAX	166.20
		MISCELLANEOUS	PRECISION POOLS & PATIOS:	25.00
		MIDWEST PUBLIC RISK	DENTAL	162.46
			OPEN ACCESS	567.60
			OPEN ACCESS	203.08
			HSA	251.75
			HSA	1,540.88
			HSA	161.08
			VISION	50.63
			VISION	114.97
			VISION	26.26
		HSA BANK	HSA - GRAIN VALLEY, MO	259.62
			HSA - GRAIN VALLEY, MO	372.02
		SHERIFFS RETIREMENT SYSTEM	MAR 2020 SHERIFF RETIREMEN	141.73
		THE LINCOLN NATIONAL LIFE INSURANCE CO	APR 2020 DISABILITY	259.30
		CITY OF GRAIN VALLEY -FLEX	FLEX - DEPENDENT CARE	213.16
		HOPE HOUSE	MAR 20 DOMESTIC VIOLENCE	192.00
		MO DEPT OF REVENUE	MAR 2020 CVC FUNDS	342.24
		MO DEPT OF PUBLIC SAFETY	MAR 20 TRAINING FUND	48.00
		ICMA RC	ICMA 457 %	257.11
			ICMA 457	363.39
			ICMA ROTH IRA	67.50
		INTERNAL REVENUE SERVICE	FEDERAL WH	6,354.23
			FEDERAL WH	250.00
			SOCIAL SECURITY	4,374.66
			SOCIAL SECURITY	418.31
			MEDICARE	1,023.10
			MEDICARE	97.82
			TOTAL:	22,322.34
HR/CITY CLERK	GENERAL FUND	VALIDITY SCREENING SOLUTIONS	SEASONAL SCREENING	160.00
		MISSOURI LAGERS	MONTHLY CONTRIBUTIONS	157.08
		WAGEWORKS	MAR 2020 MONTHLY FEES	63.50
		STANDARD INSURANCE CO	APR 20 STANDARD LIFE	12.00
		MIDWEST PUBLIC RISK	DENTAL	34.56
			HSA	237.40
			HSA	312.21
		HSA BANK	HSA - GRAIN VALLEY, MO	100.00
		THE LINCOLN NATIONAL LIFE INSURANCE CO	APR 2020 DISABILITY	16.58
		CONCENTRA MEDICAL CENTERS	SEASONAL SCREENINGS	716.00
			SCREENING	447.50
		INTERNAL REVENUE SERVICE	SOCIAL SECURITY	110.72
			MEDICARE	25.90
		MARELLY AEDS & FIRST AID	AED Program Renewals	1,000.00
			TOTAL:	3,393.45
INFORMATION TECH	GENERAL FUND	NETSTANDARD INC	Battery Backup Install	1,053.75

DEPARTMENT	FUND	VENDOR NAME	DESCRIPTION	AMOUNT
			FEB DATASAFE BACKUPS	1,000.00
			NETSTANDARD CLARITY	3,708.00
			03/12-04/11 OFFICE 365	738.00
		COBAN TECHNOLOGIES INC	COBAN LICENSE RENEWAL	2,174.76
		OREILLY AUTOMOTIVE INC	Fleet Scanner Update	829.99
		CDW GOVERNMENT	Adobe All Aps	461.21
			Adobe Acrobat Pro	278.22
			Autocad	4,797.00
		VERIZON WIRELESS	CELLULAR SERVICE	160.04
			CELLULAR SERVICE	40.01
			TOTAL:	15,240.98
BLDG & GRDS	GENERAL FUND	BATTS COMMUNICATIONS SERVICES INC	APRIL 20 MAINTENANCE	125.00
		MAINTENANCE SUPPLY CO INC	TORK UNIVERSAL MATIC ROLL	410.56
		PETTY CASH	DISINTECTANT	20.00
		GENERAL ELEVATOR	APRIL SERVICE	144.00
		SITEONE LANDSCAPE SUPPLY LLC	FERTILIZER	33.08
		HOME DEPOT CREDIT SERVICES	EZ TWIST N LOCK 75 50 PK	20.85
			CLEANING SUPPLIES	37.47
		MENARDS - INDEPENDENCE	CLEANING SUPPLIES/PICNIC T	96.68
		KENNYCO INDUSTRIES	LABOR TO SERVICE FIRE ALAR	171.60
		SPIRE	517 GREGG ST	597.79
			624 JAMES ROLLO CT	37.34
			711 S MAIN ST	83.98
		EVERGY	GREGG ST	46.28
			600 BUCKNER TARSNEY RD	21.12
			596 BUCKNER TARSNEY RD	14.07
			CAPPELL & FRONT, PH, PUBLI	11.09
			618 JAMES ROLLO CT	118.13
			1608 NW WOODBURY DR	32.82
			6100 S BUCKNER TARSNEY RD	23.77
			618 JAMES ROLLO CT	24.52
			711 MMAIN ST CITY HALL	937.85
			620 JAMES ROLLO CT	114.45
			517 GREGG	89.31
			1805 NW WILLOW DR	32.70
		SUMMIT GENERAL CONTRACTING LLC	NEW DOORS	4,063.13
			TOTAL:	7,307.59
ADMINISTRATION	GENERAL FUND	MISSOURI LAGERS	MONTHLY CONTRIBUTIONS	290.35
		OFFICE DEPOT	CLEANER	6.39
			CREDIT APPLIED TWICEC	32.99
		STANDARD INSURANCE CO	APR 20 STANDARD LIFE	15.00
		COSENTINOS PRICE CHOPPER	TISSUES	10.64
		PURCHASE POWER	POSTAGE	3,000.00
		MIDWEST PUBLIC RISK	DENTAL	22.39
			OPEN ACCESS	180.19
			HSA	222.47
		HSA BANK	HSA - GRAIN VALLEY, MO	57.98
		THE LINCOLN NATIONAL LIFE INSURANCE CO	APR 2020 DISABILITY	28.96
		FIRST AMERICAN TITLE	TITLE REPORT GUARANTEE	175.00
		INTERNAL REVENUE SERVICE	SOCIAL SECURITY	233.24
			MEDICARE	54.55
			TOTAL:	4,330.15
ELECTED	GENERAL FUND	SUMMIT LITHO INC	City publication	4,766.96

DEPARTMENT	FUND	VENDOR NAME	DESCRIPTION	AMOUNT
		VERIZON WIRELESS	CELLULAR SERVICE	40.01
		INTERNAL REVENUE SERVICE	SOCIAL SECURITY	418.31
			MEDICARE	97.82
			TOTAL:	5,323.10
FINANCE	GENERAL FUND	MO DEPT OF REVENUE	MISSOURI WITHHOLDING	0.50
			MISSOURI WITHHOLDING	0.50
		MISSOURI LAGERS	MONTHLY CONTRIBUTIONS	229.63
		STANDARD INSURANCE CO	APR 20 STANDARD LIFE	12.00
		MIDWEST PUBLIC RISK	DENTAL	34.56
			OPEN ACCESS	391.03
			HSA	143.87
		HSA BANK	HSA - GRAIN VALLEY, MO	37.50
		THE LINCOLN NATIONAL LIFE INSURANCE CO	APR 2020 DISABILITY	24.23
		TYLER TECHNOLOGIES INC	CRAIG: TRAINING CASH COLLE	137.50
			CRAIG: TRAINING CASH COL A	137.50
			CRAIG: TRAINING PO PROCESS	137.50
		INTERNAL REVENUE SERVICE	SOCIAL SECURITY	174.07
			MEDICARE	40.71
			TOTAL:	1,501.10
COURT	GENERAL FUND	CITY OF BLUE SPRINGS	FEBRUARY 2020 PRISONERS	630.00
		MISSOURI LAGERS	MONTHLY CONTRIBUTIONS	144.32
		PETTY CASH	PRISONER MEAL	3.56
		STANDARD INSURANCE CO	APR 20 STANDARD LIFE	12.00
		MIDWEST PUBLIC RISK	DENTAL	17.59
			HSA	287.74
		HSA BANK	HSA - GRAIN VALLEY, MO	75.00
		THE LINCOLN NATIONAL LIFE INSURANCE CO	APR 2020 DISABILITY	15.23
		RAY COUNTY SHERIFFS DEPARTMENT	FEBRUARY 2020	585.00
		INTERNAL REVENUE SERVICE	SOCIAL SECURITY	170.25
			MEDICARE	39.81
			TOTAL:	1,980.50
VICTIM SERVICES	GENERAL FUND	MISSOURI LAGERS	MONTHLY CONTRIBUTIONS	127.32
		STANDARD INSURANCE CO	APR 20 STANDARD LIFE	12.00
		MIDWEST PUBLIC RISK	DENTAL	34.56
			HSA	624.41
		HSA BANK	HSA - GRAIN VALLEY, MO	100.00
		THE LINCOLN NATIONAL LIFE INSURANCE CO	APR 2020 DISABILITY	13.43
		VERIZON WIRELESS	CELLULAR SERVICE	42.26
		INTERNAL REVENUE SERVICE	SOCIAL SECURITY	137.92
			MEDICARE	32.26
			TOTAL:	1,124.16
FLEET	GENERAL FUND	MISSOURI LAGERS	MONTHLY CONTRIBUTIONS	71.03
		ADVANCE AUTO PARTS	ANTIFRZ DEX 50/50	48.42
			ZX G-05 RTU AFC/BRAKE CLEA	85.74
		STANDARD INSURANCE CO	APR 20 STANDARD LIFE	6.00
		OREILLY AUTOMOTIVE INC	2 POST VEHICLE LIFT	3,339.50
			STRUT SPRING COMPRESSOR	512.00
			2 POST VEHICLE LIFT	500.00
			WYPALL X80/NITRILE GLV	107.97
			CLOTH TAPE	65.42
			NOTRILE GLOVE	41.97
			TIRE SEALANT	32.99

DEPARTMENT	FUND	VENDOR NAME	DESCRIPTION	AMOUNT
		GOODYEAR COMMERCIAL TIRE	TIRE SEALANT	150.00
		UNDERPRESSURE CLEANING SYSTEMS	1/2" KERICK PVC FLOAT VALV	19.48
		KC WHOLESALE	TARP STRAP	12.42
		MIDWEST PUBLIC RISK	DENTAL	17.28
			HSA	143.87
		HSA BANK	HSA - GRAIN VALLEY, MO	37.50
		THE LINCOLN NATIONAL LIFE INSURANCE CO	APR 2020 DISABILITY	7.50
		CINTAS CORPORATION # 430	PW/WOLTZ UNIFORMS	9.92
		MATHESON TRI GAS INC	NOZZLE/ARG 75% / 25% CO2 1	145.11
		INTERNAL REVENUE SERVICE	SOCIAL SECURITY	55.46
			MEDICARE	12.97
		CLARK EQUIPMENT CO	CT-29 CRYO-TECH SET	129.95
			TOTAL:	5,552.50
POLICE	GENERAL FUND	MISSOURI LAGERS	EMPLOYER CONTRIBUTIONS	3,939.27
			MONTHLY CONTRIBUTIONS	365.35
		PETTY CASH	MEAL FOR RUNAWAY	8.24
			BAKING SODA	1.73
			DOG FOOD	47.99
		ADVANCE AUTO PARTS	BATTERY/OIL FILTER - PURE	104.74
		STATE BANK OF MISSOURI	04/20 IN-CAR SYSTEM	2,314.61
		EAGLE VALLEY AUTOMOTIVE LLC	4 WHEEL ALIGNMENT	69.95
		STANDARD INSURANCE CO	APR 20 STANDARD LIFE	312.00
		OREILLY AUTOMOTIVE INC	TIMING BELT/WATER PUMP/ARM	296.15
			WATER PUMP/TIMING BELT	120.29-
		HAMPEL OIL INC	BULK GASOHOL/DIESEL	889.80
			BULK GASOHOL/DIESEL	79.97
			BULK GASOHOL/DIESEL	879.01
			BULK GASOHOL/DIESEL	155.89
		COMCAST	HIGH SPEED INTERNET	149.85
		GOODYEAR COMMERCIAL TIRE	3) GY 245/55R18 EAG RSA	406.50
		MIDWEST PUBLIC RISK	APR 20 MED RECON	0.09-
			DENTAL	211.08
			DENTAL	483.84
			OPEN ACCESS	720.78
			OPEN ACCESS	1,564.10
			OPEN ACCESS	688.35
			HSA	949.58
			HSA	3,165.14
			HSA	4,370.87
			HSA	549.59
		HSA BANK	HSA - GRAIN VALLEY, MO	825.00
			HSA - GRAIN VALLEY, MO	1,000.00
		THE LINCOLN NATIONAL LIFE INSURANCE CO	APR 2020 DISABILITY	435.03
		METRO FORD	ALTERNATOR	565.00
			CORE	75.00-
		VERIZON WIRELESS	CELLULAR SERVICE	80.02
			CELLULAR SERVICE	126.78
			CELLULAR SERVICE	1,172.80
		LEES SUMMIT	COUPLING	148.00
		CREATIVE PRODUCT SOURCING INC	DARE COLLECTORS COIN	3.45
		INTERNAL REVENUE SERVICE	SOCIAL SECURITY	3,020.58
			MEDICARE	706.43
		REJIS COMMISSION	MAR 20 LEWEB SUBSCRIPTION	312.95
			TOTAL:	30,925.04

DEPARTMENT	FUND	VENDOR NAME	DESCRIPTION	AMOUNT
ANIMAL CONTROL	GENERAL FUND	MISSOURI LAGERS	MONTHLY CONTRIBUTIONS	98.50
		STANDARD INSURANCE CO	APR 20 STANDARD LIFE	12.00
		HAMPEL OIL INC	BULK GASOHOL/DIESEL	59.87
			BULK GASOHOL/DIESEL	48.25
		MIDWEST PUBLIC RISK	OPEN ACCESS	360.39
		ASPEN PET CREMATIONS	ASPEN PET CREMATIONS	38.00
			ASPEN PET CREMATIONS	100.32
		THE LINCOLN NATIONAL LIFE INSURANCE CO	APR 2020 DISABILITY	10.40
		VERIZON WIRELESS	CELLULAR SERVICE	42.26
		INTERNAL REVENUE SERVICE	SOCIAL SECURITY	77.30
			MEDICARE	18.08
			TOTAL:	865.37
PLANNING & ENGINEERING	GENERAL FUND	MISSOURI LAGERS	MONTHLY CONTRIBUTIONS	514.02
		STANDARD INSURANCE CO	APR 20 STANDARD LIFE	35.97
		HAMPEL OIL INC	BULK GASOHOL/DIESEL	63.40
		MIDWEST PUBLIC RISK	DENTAL	48.37
			DENTAL	10.10
			OPEN ACCESS	103.25
			HSA	791.29
			HSA	78.24
		HSA BANK	HSA - GRAIN VALLEY, MO	206.25
			HSA - GRAIN VALLEY, MO	14.24
		THE LINCOLN NATIONAL LIFE INSURANCE CO	APR 2020 DISABILITY	54.25
		VERIZON WIRELESS	CELLULAR SERVICE	6.34
		THE EXAMINER	COMM DEV DILLINGHAM WATERL	364.56
			TITLE IV	61.74
		INTERNAL REVENUE SERVICE	SOCIAL SECURITY	395.14
			MEDICARE	92.42
			TOTAL:	2,839.58
NON-DEPARTMENTAL	PARK FUND	KCMO CITY TREASURER	KC EARNINGS TAX WH	21.36
		MO DEPT OF REVENUE	MISSOURI WITHHOLDING	424.87
		FAMILY SUPPORT PAYMENT CENTER	SMITH CASE 91316387	92.31
		AFLAC	AFLAC CRITICAL CARE	6.78
			AFLAC PRETAX	54.54
			AFLAC-W2 DD PRETAX	71.43
		MISCELLANEOUS	JESSICA HODKINS:	14.66
		MIDWEST PUBLIC RISK	DENTAL	31.03
			OPEN ACCESS	22.70
			HSA	312.17
			HSA	18.13
			VISION	15.48
			VISION	12.12
			VISION	1.10
		HSA BANK	HSA - GRAIN VALLEY, MO	75.00
			HSA - GRAIN VALLEY, MO	47.00
		THE LINCOLN NATIONAL LIFE INSURANCE CO	APR 2020 DISABILITY	7.54
		CITY OF GRAIN VALLEY -FLEX	FLEX - DEPENDENT CARE	195.70
		ICMA RC	ICMA 457 %	172.28
			ICMA 457	536.92
			ICMA ROTH IRA	46.88
			ICMA ROTH IRA	3.50
		INTERNAL REVENUE SERVICE	FEDERAL WH	1,124.02
			SOCIAL SECURITY	809.70
			MEDICARE	189.37

DEPARTMENT	FUND	VENDOR NAME	DESCRIPTION	AMOUNT
			TOTAL:	4,306.59
PARK ADMIN	PARK FUND	NETSTANDARD INC	NETSTANDARD CLARITY	618.00
		MISSOURI LAGERS	MONTHLY CONTRIBUTIONS	526.14
		AT&T	U-VERSE PARK MAINTENANCE	69.55
		STANDARD INSURANCE CO	APR 20 STANDARD LIFE	31.20
		KNAPHEIDE TRUCK EQ CENTER	TAILGATE SPREADER	2,180.00
			SNOW PLOW	6,971.00
		HAMPEL OIL INC	BULK GASOHOL/DIESEL	120.45
			BULK GASOHOL/DIESEL	159.54
		KCMPRDA C/O TRUMAN HEARTLAND	DAVIES: MEMBERSHIP	75.00
		MIDWEST PUBLIC RISK	DENTAL	3.44
			DENTAL	82.96
			OPEN ACCESS	36.04
			OPEN ACCESS	78.21
			HSA	997.06
			HSA	56.21
			HSA	62.44
		HSA BANK	HSA - GRAIN VALLEY, MO	14.65
			HSA - GRAIN VALLEY, MO	220.00
		METALSBETTER ROOFING & SHEET METAL	New Roof for MM4	3,000.00
		THE LINCOLN NATIONAL LIFE INSURANCE CO	APR 2020 DISABILITY	55.50
		SUMMIT LITHO INC	City publication	2,383.48
			City publication	2,383.48
		VERIZON WIRELESS	CELLULAR SERVICE	82.27
		COOK FLATT & STROBEL ENGINEERS PA	Ped Bridge Des/Eng	9,243.00
		INTERNAL REVENUE SERVICE	SOCIAL SECURITY	378.81
			MEDICARE	88.60
		MARELLY AEDS & FIRST AID	AED Program Renewals	140.00
			TOTAL:	30,057.03
PARKS STAFF	PARK FUND	K C BOBCAT	Skid Steer Repair	1,143.02
		MISSOURI LAGERS	MONTHLY CONTRIBUTIONS	375.92
		VITAL SIGNS OF KC LLC	SIGNBOARD & STANDS	12.00
			PARK COVID SIGNS	140.00
			SKATE PARK CLOSED SIGNS	112.00
		ADVANCE AUTO PARTS	SPARK PLUG/MOTOR OIL/FUEL	45.68
			BATTERY	96.47
		STANDARD INSURANCE CO	APR 20 STANDARD LIFE	36.00
		OREILLY AUTOMOTIVE INC	ROCKER SW	20.05
			OIL/AIR/FUEL FILTER	52.34
			OIL/HYD/AIR FILTER	155.35
			BATTERY	48.24
			HYD FILTER	31.62
			OIL/AIR FILTERS/MOTOR OIL	121.55
		BLUE SPRINGS WINWATER CO	Trail Culvert Pipe	2,210.00
		FASTENAL COMPANY	BOLTS	27.19
			GRINDING WHEEL	3.32
			3/8-16 X 2 GALV	12.04-
			PICNIC TABLE REPAIRS	28.79
			3/8-16X 2 GALV	12.04-
			PICNIC TABLE BOLTS	12.04
			PICNIC TABLE BOLTS	27.52
		WEST CENTRAL ELECTRIC COOP INC	02/25-03/27 BALLPARK COMPL	228.69
		HOME DEPOT CREDIT SERVICES	FOOTBALL FIELD BUILDING	15.80
			RETURN DECK MATERIALS	53.94-

DEPARTMENT	FUND	VENDOR NAME	DESCRIPTION	AMOUNT
			FOOTBALL FIELD TOOLS/SUPPL	208.98
			FOOTBALL FIELD TOOLS/SUPPL	111.36
			FLOOR PAINT	117.00
			RETURN	8.97-
			CLEANING SUPPLIES	37.37
			FOOTBALL BUILDING PAINT	262.76
		MENARDS - INDEPENDENCE	9" 5/8 TPI RECIPBLADE 5PK	494.47
			RETURNS	479.63-
			FOOTBALL BUILDING DECKS/ST	480.51
			CLEANING SUPPLIES/PICNIC T	150.00
		MIDWEST PUBLIC RISK	DENTAL	35.18
			DENTAL	34.56
			HSA	474.79
			HSA	575.48
		HSA BANK	HSA - GRAIN VALLEY, MO	150.00
			HSA - GRAIN VALLEY, MO	100.00
		KENNYCO INDUSTRIES	LABOR TO SERVICE FIRE ALAR	28.60
		SPIRE	600 BUCKNER TARSNEY	144.55
			624 JAMES ROLLO CT	18.64
		THE LINCOLN NATIONAL LIFE INSURANCE CO	APR 2020 DISABILITY	39.63
		GENESIS POWDER COATING LLC	SIGN HOLDER	313.00
		EVERGY	701 SW EAGLES PKWY, BALLFI	163.52
			ARMSTRONG PARK 041503	94.61
			ARMSTRONG PARK DR	31.93
			ARMSTRONG PARK 098095	30.73
			ARMSTRONG PARK 017576	112.08
			28605 E HWY AA	42.83
			JAMES ROLLO SHELTER #2	77.49
			MAIN-ARMSTRONG SHELTER 1	23.14
			618 JAMES ROLLO CT	59.06
			ARMSTRONG PARK	36.69
			6100 S BUCKNER TARSNEY	84.33
			28605 E HWY AA	145.93
			618 JAMES ROLLO CT	12.26
		OAK GROVE RENTAL INC	STRAW BLOWER	90.00
			STRAW BLOWER RENTAL	90.00
		LAWN & LEISURE	FUEL FILTER/LATCH	125.42
		INTERNAL REVENUE SERVICE	SOCIAL SECURITY	279.36
			MEDICARE	65.34
		CLARK EQUIPMENT CO	10PC TAMPER RESISTANT FOLD	31.80
			TOTAL:	9,750.37
RECREATION	PARK FUND	VITAL SIGNS OF KC LLC	SIGNBOARD & STANDS	76.00
		INTERNAL REVENUE SERVICE	SOCIAL SECURITY	3.01
			MEDICARE	0.70
			TOTAL:	79.71
COMMUNITY CENTER	PARK FUND	BATTS COMMUNICATIONS SERVICES INC	APRIL 20 MAINTENANCE	12.50
		MELODY TAYLOR	03/09-03/16 SILVERSNEAKERS	25.00
			SILVERSNEAKERS FITNES	75.00
		UNIFIRST CORPORATION	JANITORIAL SUPPLIES	103.16
		MISSOURI LAGERS	MONTHLY CONTRIBUTIONS	138.38
		SAMS CLUB/GECRB	COMM CENTER SUPPLIES	116.42
		WALMART COMMUNITY	HAND SANITIZER	14.98
			RETURNS	13.00-
		STANDARD INSURANCE CO	APR 20 STANDARD LIFE	12.00

DEPARTMENT	FUND	VENDOR NAME	DESCRIPTION	AMOUNT
		SITEONE LANDSCAPE SUPPLY LLC	FERTILIZER	16.54
		MARK A LONG	2020 SPRING KARATE CLASS	293.61
		MIDWEST PUBLIC RISK	DENTAL	17.59
			HSA	287.74
		HSA BANK	HSA - GRAIN VALLEY, MO	75.00
		REEVES-WIEDEMAN COMPANY	MENS HANDICAP SHOWER REPAI	23.55
		SPIRE	713 S MAIN ST	296.46
			713 S MAIN ST A	35.27
		THE LINCOLN NATIONAL LIFE INSURANCE CO	APR 2020 DISABILITY	14.60
		REWIND FITNESS LLC	FITNESS EQUIPMENT MAINTENA	277.00
		VERIZON WIRELESS	CELLULAR SERVICE	42.26
		FREDAH JOHNSTON	03/10-03/19 LINE DACNING	34.50
		BRITTNEY PERRY	02/19-03/25 WED HOMESCHOOL	95.21
		EVERGY	713 MAIN ST	1,078.74
			713 MAIN #A	263.56
		DAYMARK SOLUTIONS INC	LOANER PRINTER	95.00
		INTERNAL REVENUE SERVICE	SOCIAL SECURITY	148.52
			MEDICARE	34.73
			TOTAL:	3,614.32
NON-DEPARTMENTAL	TRANSPORTATION	MO DEPT OF REVENUE	MISSOURI WITHHOLDING	145.45
		FAMILY SUPPORT PAYMENT CENTER	DZEKUNSKAS CASE 41452523	30.00
		AFLAC	AFLAC PRETAX	4.64
			AFLAC-W2 DD PRETAX	8.05
		MIDWEST PUBLIC RISK	DENTAL	17.31
			OPEN ACCESS	25.23
			OPEN ACCESS	26.49
			HSA	60.42
			HSA	72.52
			HSA	76.47
			VISION	3.10
			VISION	1.37
			VISION	2.19
			VISION	5.54
		HSA BANK	HSA - GRAIN VALLEY, MO	15.04
			HSA - GRAIN VALLEY, MO	79.01
		THE LINCOLN NATIONAL LIFE INSURANCE CO	APR 2020 DISABILITY	2.58
		ICMA RC	ICMA 457	19.50
		INTERNAL REVENUE SERVICE	FEDERAL WH	393.11
			SOCIAL SECURITY	279.22
			MEDICARE	65.30
			TOTAL:	1,332.54
TRANSPORTATION	TRANSPORTATION	A&A ELECTRICAL INC	REPLACE SWITCH FOR CALCIUM	16.53
		NETSTANDARD INC	FEB DATASAFE BACKUPS	200.00
			NETSTANDARD CLARITY	370.80
			03/12-04/11 OFFICE 365	147.60
		CARTER WATERS	SATUROCK PREMIUM W/ KEVLAR	179.00
		BATTS COMMUNICATIONS SERVICES INC	APRIL 20 MAINTENANCE	12.50
		GARY S KLEOPPEL	SERVICE CALL	18.00
			SERVICE CALL	18.00
		MISSOURI LAGERS	MONTHLY CONTRIBUTIONS	366.67
		STANDARD INSURANCE CO	APR 20 STANDARD LIFE	31.77
		BLUE SPRINGS WINWATER CO	FLARE TOOL	5.00
		VANCE BROTHERS INC	VIRGIN SURFACE MIX	492.00
		HAMPEL OIL INC	BULK GASOHOL/DIESEL	110.12

DEPARTMENT	FUND	VENDOR NAME	DESCRIPTION	AMOUNT
			BULK GASOHOL/DIESEL	101.98
		KORNIS ELECTRIC SUPPLY INC	MOUNTING ADAPTOR	9.20
		HOME DEPOT CREDIT SERVICES	MULTI USE SPRAYER/NABBER	19.97
			MULTI USE SPRAYER/NABBER	9.96
			REPAIR CRACKS IN STORM BOX	11.34
			BLK COUPLING/ BLK NIPPLE	1.82
		PENNYS CONCRETE INC	CONCRETE	172.05
		KC WHOLESALE	IRREGULAR GASKET	11.74
			DOOR HINGE/DOOR LATCH	69.82
			2) SEAT ASSY	252.80
			TEE	3.94
		HD GRAPHICS & APPAREL	SCREEN PRINTING	20.40
		MIDWEST PUBLIC RISK	DENTAL	14.08
			DENTAL	65.38
			OPEN ACCESS	118.93
			OPEN ACCESS	72.08
			OPEN ACCESS	103.25
			HSA	284.88
			HSA	172.65
			HSA	249.76
			HSA	298.08
		HSA BANK	HSA - GRAIN VALLEY, MO	30.00
			HSA - GRAIN VALLEY, MO	154.24
		G W VAN KEPPEL CO	LOCK ARM/SPRING/PIVOT PIN	75.75
			PUSHER PLATE	35.73
		KENNYCO INDUSTRIES	LABOR TO SERVICE FIRE ALAR	17.16
		SPIRE	405 JAMES ROLLO DR	93.96
			624 JAMES ROLLO CT	37.34
			711 S MAIN ST	7.20
			618 JAMES ROLLO CT	92.43
		THE LINCOLN NATIONAL LIFE INSURANCE CO	APR 2020 DISABILITY	41.80
		JOHN DEERE FINANCIAL	HOSE COUPLED PVC SUCTION	7.99
			GLOVE UNLINED FOREMAN	5.19
		VERIZON WIRELESS	CELLULAR SERVICE	72.48
			CELLULAR SERVICE	6.34
		CINTAS CORPORATION # 430	PW/WOLTZ UNIFORMS	26.10
		EVERGY	655 SW EAGLES PKWY	38.67
			618 JAMES ROLLO CT	118.13
			AA HWY & SNI-A-BAR BLVD	32.91
			702 SW EAGLES PKWY	39.11
			GRAIN VALLEY ST LIGHTS	12,084.08
			618 JAMES ROLLO CT	24.52
			711 MMAIN ST CITY HALL	80.39
		VIKING-CIVES MIDWEST INC	FLINK QUICK LINK SWIVEL	424.00
			1/2" STAINLESS STEEL D-RIN	68.40
		INDEPENDENT SALT COMPANY	INDEPENDENT SALT COMPANY	196.22
		KLEINSCHMIDTS WESTERN STORE	WELSH BOOTS	25.99
			LANDERS BOOTS	25.99
		INTERNAL REVENUE SERVICE	SOCIAL SECURITY	279.20
			MEDICARE	65.30
			TOTAL:	18,238.72
CAPITAL IMPROVEMENTS	CAPITAL PROJECTS F	PEREGRINE CORPORATION	GVCC WATER BILL FLIER	400.00
			GVCC WATER BILL FLIER	200.00
		COSENTINOS PRICE CHOPPER	GVCC MEETING SUPPLIES	16.91
		STEVEN SMITH	2) 24X36 ONE SIDED 1/4" UL	100.00

DEPARTMENT	FUND	VENDOR NAME		DESCRIPTION	AMOUNT
		CINEMATIC VISIONS II, INC.		GVCC VIDEO	1,000.00
		MODERN PERCEPTIONS		PROPERTY ASSESSMENT	500.00
				TOTAL:	2,216.91
NON-DEPARTMENTAL	MKTPL TIF-PR#2 SPE	UMB BANK		PRO #2 4TH QTR ZOO	4,792.32
				PRO #2 4TH QTR COUNTY	29,405.22
				PRO #2 CITY SALES	57,588.99
				TOTAL:	91,786.53
NON-DEPARTMENTAL	MKT PL CID-PR2 SAL	UMB BANK		CID/USE	24,032.90
				CID/USE UNCAPTURED	23,311.91
				TOTAL:	47,344.81
NON-DEPARTMENTAL	WATER/SEWER FUND	KCMO CITY TREASURER		KC EARNINGS TAX WH	8.71
		MO DEPT OF REVENUE		MISSOURI WITHHOLDING	1,013.36
		FAMILY SUPPORT PAYMENT CENTER		DZEKUNSKAS CASE 41452523	120.00
		MO DEPT OF REVENUE		MAR 20 SALES TAX	3,169.47
				MAR 20 SALES TAX	63.39-
		AFLAC		AFLAC PRETAX	36.58
				AFLAC-W2 DD PRETAX	88.43
		MISCELLANEOUS	DISCOVERY CHURCH	20-115900-02	64.61
			VAN VLECK, MEGAN	20-119100-16	25.97
			SKAGGS, AMANDA	20-152080-05	55.96
			BRACKEN, ERIN	20-199570-09	65.54
			CAREY, DEANNA	20-199720-09	65.54
			GARCIA, ANTHONY	20-260700-02	15.54
			STUBBS, SHON-MICHAEL	20-567010-01	31.08
			UPTEGROVE, LAURA	20-567760-04	65.54
			DAVE RICHARDS HOME B	20-623695-00	15.54
			RAWLINGS, ZACHARY	20-682770-02	61.46
			FICKLIN, SCOTT	20-701580-10	65.54
			MILLER, CHRISTINA	20-707200-05	15.54
			WARD DEVELOPMENT	20-711080-00	15.54
			SLIGAR, KATHRYN	20-711960-04	15.54
		MIDWEST PUBLIC RISK		DENTAL	108.75
				OPEN ACCESS	100.90
				OPEN ACCESS	90.82
				OPEN ACCESS	123.61
				HSA	281.96
				HSA	543.83
				HSA	467.45
				VISION	12.38
				VISION	10.17
				VISION	13.14
				VISION	24.06
		HSA BANK		HSA - GRAIN VALLEY, MO	110.33
				HSA - GRAIN VALLEY, MO	431.97
		THE LINCOLN NATIONAL LIFE INSURANCE CO		APR 2020 DISABILITY	57.10
		CITY OF GRAIN VALLEY -FLEX		FLEX - DEPENDENT CARE	162.80
		ICMA RC		ICMA 457 %	75.40
				ICMA 457	202.69
				ICMA ROTH IRA	24.00
		INTERNAL REVENUE SERVICE		FEDERAL WH	2,943.48
				SOCIAL SECURITY	1,928.30
				MEDICARE	451.00
				TOTAL:	13,116.24

DEPARTMENT	FUND	VENDOR NAME	DESCRIPTION	AMOUNT
WATER	WATER/SEWER FUND	A&A ELECTRICAL INC	REPLACE SWITCH FOR CALCIUM	33.06
		NETSTANDARD INC	FEB DATASAFE BACKUPS	400.00
			NETSTANDARD CLARITY	741.60
			03/12-04/11 OFFICE 365	295.20
		PEREGRINE CORPORATION	20 BILL PRINT & MAIL	594.98
			20 BILL PRINT & MAIL	114.54
			20 BILL PRINT & MAIL	599.62
			20 BILL PRINT & MAIL	114.54
		BATTS COMMUNICATIONS SERVICES INC	APRIL 20 MAINTENANCE	50.00
		GARY S KLEOPPEL	SERVICE CALL	36.00
			SERVICE CALL	36.00
		CITY OF INDEPENDENCE UTILITIES	22315 CCF 02/13-03/16	34,658.25
		MISSOURI LAGERS	MONTHLY CONTRIBUTIONS	1,271.43
		OFFICE DEPOT	TONER	67.00
		STANDARD INSURANCE CO	APR 20 STANDARD LIFE	99.93
		UMB BANK NA	GV13 SRS2013 INTEREST	2,400.00
		OREILLY AUTOMOTIVE INC	2 POST VEHICLE LIFT	1,669.75
			STRUT SPRING COMPRESSOR	256.00
			2 POST VEHICLE LIFT	250.00
		TRI-COUNTY WATER AUTHORITY	CONSUMPTION	18,979.00
			DEBT	63,231.27
		BLUE SPRINGS WINWATER CO	WATER PLUG	672.00
			FLANGE PACK W/FULL FACE GS	18.00
			MARKING FLAGS/4X5 PLAIN W/	104.00
			FLARE TOOL	10.00
		STEVEN SMITH	2500) #10 WINDOW ENVELOPES	87.50
		HAMPEL OIL INC	BULK GASOHOL/DIESEL	300.48
			BULK GASOHOL/DIESEL	203.95
		KORNIS ELECTRIC SUPPLY INC	MOUNTING ADAPTOR	18.40
		HOME DEPOT CREDIT SERVICES	MULTI USE SPRAYER/NABBER	19.91
			BLK COUPLING/ BLK NIPPLE	3.66
		PENNYS CONCRETE INC	CONCRETE	344.10
		KC WHOLESALE	IRREGULAR GASKET	23.46
			DOOR HINGE/DOOR LATCH	139.64
			2) SEAT ASSY	505.60
			TEE	7.87
		HD GRAPHICS & APPAREL	SCREEN PRINTING	40.80
		MIDWEST PUBLIC RISK	DENTAL	43.83
			DENTAL	205.86
			OPEN ACCESS	237.86
			OPEN ACCESS	216.24
			OPEN ACCESS	156.41
			OPEN ACCESS	240.92
			HSA	664.72
			HSA	673.54
			HSA	936.61
			HSA	911.01
		HSA BANK	HSA - GRAIN VALLEY, MO	145.56
			HSA - GRAIN VALLEY, MO	455.77
		G W VAN KEPPEL CO	LOCK ARM/SPRING/PIVOT PIN	151.51
			PUSHER PLATE	71.45
		KENNYCO INDUSTRIES	LABOR TO SERVICE FIRE ALAR	34.32
		SPIRE	405 JAMES ROLLO DR	187.80
			624 JAMES ROLLO CT	46.63
			711 S MAIN ST	14.38
			618 JAMES ROLLO CT	185.07

DEPARTMENT	FUND	VENDOR NAME	DESCRIPTION	AMOUNT
		THE LINCOLN NATIONAL LIFE INSURANCE CO	APR 2020 DISABILITY	139.09
		JOHN DEERE FINANCIAL	HOSE COUPLED PVC SUCTION	16.00
			GLOVE UNLINED FOREMAN	10.40
		VERIZON WIRELESS	CELLULAR SERVICE	144.95
			CELLULAR SERVICE	14.79
		CINTAS CORPORATION # 430	PW/WOLTZ UNIFORMS	52.22
		EVERGY	825 STONEBROOK DR	110.80
			1301 TYER RD UNIT A	180.21
			618 JAMES ROLLO CT	147.67
			110 SNI-A-BAR BLVD	82.44
			1301 TYER RD UNIT B	231.29
			618 JAMES ROLLO CT UNIT B	1,950.88
			618 JAMES ROLLO CT	30.65
			711 MMAIN ST CITY HALL	160.77
			1012 STONE BROOK LN	106.12
		VIKING-CIVES MIDWEST INC	1/2" STAINLESS STEEL D-RIN	136.80
		TYLER TECHNOLOGIES INC	MAR 20 MONTHLY FEES	97.00
			APR 20 MONTHLY FEES	97.00
		KLEINSCHMIDTS WESTERN STORE	WELSH BOOTS	51.98
			LANDERS BOOTS	51.98
		INTERNAL REVENUE SERVICE	SOCIAL SECURITY	964.17
			MEDICARE	225.51
			TOTAL:	138,979.75
SEWER	WATER/SEWER FUND	A&A ELECTRICAL INC	REPLACE SWITCH FOR CALCIUM	33.06
		NETSTANDARD INC	FEB DATASAFE BACKUPS	400.00
			NETSTANDARD CLARITY	741.60
			03/12-04/11 OFFICE 365	295.20
		CITY OF BLUE SPRINGS	PRINCIPAL AND INTEREST	164,501.74
		PEREGRINE CORPORATION	20 BILL PRINT & MAIL	594.99
			20 BILL PRINT & MAIL	114.55
			20 BILL PRINT & MAIL	599.62
			20 BILL PRINT & MAIL	114.55
		BATTS COMMUNICATIONS SERVICES INC	APRIL 20 MAINTENANCE	50.00
		GARY S KLEOPPEL	SERVICE CALL	36.00
			SERVICE CALL	36.00
		MISSOURI LAGERS	MONTHLY CONTRIBUTIONS	1,271.40
		OFFICE DEPOT	TONER	67.00
		STANDARD INSURANCE CO	APR 20 STANDARD LIFE	99.93
		UMB BANK NA	GV13 SRS2013 INTEREST	600.00
		OREILLY AUTOMOTIVE INC	2 POST VEHICLE LIFT	1,669.75
			STRUT SPRING COMPRESSOR	256.00
			2 POST VEHICLE LIFT	250.00
		BLUE SPRINGS WINWATER CO	MARKING FLAGS/4X5 PLAIN W/	156.00
			FLARE TOOL	10.00
		STEVEN SMITH	2500) #10 WINDOW ENVELOPES	87.50
		HAMPEL OIL INC	BULK GASOHOL/DIESEL	300.48
			BULK GASOHOL/DIESEL	203.95
		KORNIS ELECTRIC SUPPLY INC	MOUNTING ADAPTOR	18.40
		HOME DEPOT CREDIT SERVICES	MULTI USE SPRAYER/NABBER	19.91
			BLK COUPLING/ BLK NIPPLE	3.66
		PENNYS CONCRETE INC	CONCRETE	344.10
		KC WHOLESALE	IRREGULAR GASKET	23.46
			DOOR HINGE/DOOR LATCH	139.64
			2) SEAT ASSY	505.60
			TEE	7.87

DEPARTMENT	FUND	VENDOR NAME	DESCRIPTION	AMOUNT
		HD GRAPHICS & APPAREL	SCREEN PRINTING	40.80
		MIDWEST PUBLIC RISK	DENTAL	43.79
			DENTAL	205.94
			OPEN ACCESS	237.85
			OPEN ACCESS	216.23
			OPEN ACCESS	156.40
			OPEN ACCESS	240.93
			HSA	664.68
			HSA	673.50
			HSA	936.62
			HSA	911.03
		HSA BANK	HSA - GRAIN VALLEY, MO	145.56
			HSA - GRAIN VALLEY, MO	455.75
		G W VAN KEPPEL CO	LOCK ARM/SPRING/PIVOT PIN	151.51
			PUSHER PLATE	71.45
		KENNYCO INDUSTRIES	LABOR TO SERVICE FIRE ALAR	34.32
		SPIRE	405 JAMES ROLLO DR	187.92
			624 JAMES ROLLO CT	46.68
			711 S MAIN ST	14.41
			618 JAMES ROLLO CT	185.06
		ANDERSON RENTALS & SALES	CONCRETE MIXING TRAILER	130.00
			CONCRETE MIXING TRAILER	35.00
		THE LINCOLN NATIONAL LIFE INSURANCE CO	APR 2020 DISABILITY	139.09
		JOHN DEERE FINANCIAL	HOSE COUPLED PVC SUCTION	16.00
			GLOVE UNLINED FOREMAN	10.40
		VERIZON WIRELESS	CELLULAR SERVICE	144.95
			CELLULAR SERVICE	14.79
		CINTAS CORPORATION # 430	PW/WOLTZ UNIFORMS	52.22
		EVERGY	925 STONE BROOK DR	23.14
			WOODLAND DR	222.14
			405 JAMES ROLLO DR	334.58
			1326 GOLFVIEWS DR SEWER	125.71
			618 JAMES ROLLO CT	147.67
			WINDING CREEK SEWER	23.16
			618 JAMES ROLLO CT	30.65
			711 MMAIN ST CITY HALL	160.77
			1201 SEYMOUR RD	23.14
			110 NW SNI-A-BAR BLVD	23.14
			1017 ROCK CREEK LN	23.14
		VIKING-CIVES MIDWEST INC	1/2" STAINLESS STEEL D-RIN	136.80
		TYLER TECHNOLOGIES INC	MAR 20 MONTHLY FEES	97.00
			APR 20 MONTHLY FEES	97.00
		KLEINSCHMIDTS WESTERN STORE	WELSH BOOTS	51.98
			LANDERS BOOTS	51.98
		INTERNAL REVENUE SERVICE	SOCIAL SECURITY	964.13
			MEDICARE	225.46

* REFUND CHECKS *

DEPARTMENT	FUND	VENDOR NAME	DESCRIPTION	AMOUNT
NON-DEPARTMENTAL	WATER/SEWER FUND	ANDERSON, TOM	US REFUNDS	20.00
			TOTAL:	182,496.43

FUND TOTALS		
100	GENERAL FUND	102,705.86
200	PARK FUND	47,808.02
210	TRANSPORTATION	19,571.26
280	CAPITAL PROJECTS FUND	2,216.91
302	MKTPL TIF-PR#2 SPEC ALLOC	91,786.53
321	MKT PL CID-PR2 SALES/USE	47,344.81
600	WATER/SEWER FUND	334,592.42
	GRAND TOTAL:	646,025.81

TOTAL PAGES: 14

SELECTION CRITERIA

SELECTION OPTIONS

VENDOR SET: 01-CITY OF GRAIN VALLEY
VENDOR: All
CLASSIFICATION: All
BANK CODE: All
ITEM DATE: 3/14/2020 THRU 4/03/2020
ITEM AMOUNT: 99,999,999.00CR THRU 99,999,999.00
GL POST DATE: 0/00/0000 THRU 99/99/9999
CHECK DATE: 0/00/0000 THRU 99/99/9999

PAYROLL SELECTION

PAYROLL EXPENSES: NO
EXPENSE TYPE: N/A
CHECK DATE: 0/00/0000 THRU 99/99/9999

PRINT OPTIONS

PRINT DATE: None
SEQUENCE: By Department
DESCRIPTION: Distribution
GL ACCTS: NO
REPORT TITLE: C O U N C I L R E P O R T
SIGNATURE LINES: 0

PACKET OPTIONS

INCLUDE REFUNDS: YES
INCLUDE OPEN ITEM:YES

INTENTIONALLY LEFT BLANK

DEPARTMENT	FUND	VENDOR NAME	DESCRIPTION	AMOUNT
NON-DEPARTMENTAL	GENERAL FUND	KCMO CITY TREASURER	KC EARNINGS TAX WH	41.61
		MO DEPT OF REVENUE	MISSOURI WITHHOLDING	2,314.11
		FRATERNAL ORDER OF POLICE	EMPLOYEE DEDUCTIONS	336.00
		HAMPEL OIL INC	CJC FUEL	188.21
		AFLAC	AFLAC AFTER TAX	126.59
			AFLAC CRITICAL CARE	24.96
			AFLAC PRETAX	301.46
			AFLAC-W2 DD PRETAX	166.21
		MIDWEST PUBLIC RISK	DENTAL	162.80
			OPEN ACCESS	569.39
			OPEN ACCESS	203.08
			HSA	253.15
			HSA	1,543.86
			HSA	161.08
			VISION	50.99
			VISION	115.06
			VISION	26.26
		HSA BANK	HSA - GRAIN VALLEY, MO	261.29
			HSA - GRAIN VALLEY, MO	373.01
		SHARON COSTANZA	FINCH RESITUTION	150.00
		CITY OF GRAIN VALLEY -FLEX	FLEX - DEPENDENT CARE	216.67
		ICMA RC	ICMA 457 %	265.37
			ICMA 457	366.39
			ICMA ROTH IRA	67.29
		INTERNAL REVENUE SERVICE	FEDERAL WH	6,535.69
			SOCIAL SECURITY	4,444.91
			MEDICARE	1,039.53
			TOTAL:	20,304.97
HR/CITY CLERK	GENERAL FUND	VALIDITY SCREENING SOLUTIONS	SCREENINGS	120.00
		MISSOURI LAGERS	MONTHLY CONTRIBUTIONS	157.06
		MO POLICE CHIEFS ASSOCIATION	ENTRY LEVEL EXAM	325.00
		ARC PHYSICAL THERAPY PLUS LP	LOGAN/ELLEDGE WORKSTEPS	150.00
			LOGAN/ELLEDGE WORKSTEPS	100.00
		OFFICE DEPOT	PAPER/TAPE/PEN/DUSTER	10.02
		HOLIDAY INN EXECUTIVE CENTER	LOGAN: LOGDING FOR COURT C	427.60
		MOCCFOA	MEMBERSHIP RENEWAL	35.00
		MIDWEST PUBLIC RISK	DENTAL	34.67
			HSA	231.12
			HSA	322.46
		HSA BANK	HSA - GRAIN VALLEY, MO	100.33
		NEW DIRECTIONS BEHAVIORAL	2ND QTR 2020	4.11
		CONCENTRA MEDICAL CENTERS	IRELAND/SNEAD SCREENING	179.00
			DEMONBRUN SCREENING	89.50
		INTERNAL REVENUE SERVICE	SOCIAL SECURITY	110.64
			MEDICARE	25.87
			TOTAL:	2,422.38
INFORMATION TECH	GENERAL FUND	NETSTANDARD INC	MAR DATASAFE BACKUPS	1,000.00
			NETSTANDARD CLARITY	3,708.00
		MISSOURI LAGERS	MONTHLY CONTRIBUTIONS	4.59
		WALMART COMMUNITY	MONITOR MOUNT	29.43
		MIDWEST PUBLIC RISK	DENTAL	0.56
			HSA	9.21
		HSA BANK	HSA - GRAIN VALLEY, MO	2.40
		CDW GOVERNMENT	KEYBOARD	43.82

DEPARTMENT	FUND	VENDOR NAME	DESCRIPTION	AMOUNT
			Storage for Digitizing	1,534.00
			Storage for Digitizing	813.20
		INTERNAL REVENUE SERVICE	SOCIAL SECURITY	3.45
			MEDICARE	0.81
			TOTAL:	7,149.47
BLDG & GRDS	GENERAL FUND	AAA DISPOSAL SERVICE INC	MAR 20 SERVICE	77.50
		FACEBOOK INC	FACEBOOK AD	15.83
		DOLLAR TREE STORES	HAND SANITIZER SPRAY	46.00
		HOME DEPOT CREDIT SERVICES	CANE BOLT	16.20
		COMCAST	CITY HALL PHONE CHARGES	357.94
		SC REALTY SERVICES	Janitorial Services	1,579.05
		SPIRE	517 GREGG ST	154.58
			624 JAMES ROLLO CT	21.05
			711 S MAIN ST	48.78
		BRADY INDUSTRIES OF KANSAS LLC	ADV ALCOHOL FOAMING HAND	187.38
			TOTAL:	2,504.31
ADMINISTRATION	GENERAL FUND	PEREGRINE CORPORATION	CENSUS INSERTS	466.00
		RICOH USA INC	MAILROOM C85162118	134.22
			ADMIN C85162117	255.63
		MISSOURI LAGERS	MONTHLY CONTRIBUTIONS	338.33
		SAMS CLUB/GECRB	KITCHEN SUPPLIES	100.30
		AMAZON.COM	ELECTRIC STAPLER/DISHWAND	74.37
		RICOH USA INC	ADMIN C85162117	228.22
			MAILROOM C85162118	228.22
		MIDWEST PUBLIC RISK	DENTAL	23.81
			DENTAL	0.91
			OPEN ACCESS	185.65
			HSA	12.54
			HSA	241.28
		HSA BANK	HSA - GRAIN VALLEY, MO	62.89
			HSA - GRAIN VALLEY, MO	2.64
		NEW DIRECTIONS BEHAVIORAL	2ND QTR 2020	5.14
		LOGMEIN.COM	GOTOMEETING BUSINESS	200.11
		INTERNAL REVENUE SERVICE	SOCIAL SECURITY	268.07
			MEDICARE	62.68
			TOTAL:	2,891.01
ELECTED	GENERAL FUND	HEARTLAND ENERGY GROUP	DISENFECTANT DISTRIBUTION	2,335.05
			TOTAL:	2,335.05
LEGAL	GENERAL FUND	LAUBER MUNICIPAL LAW LLC	CITY ATTORNEY	5,600.00
		MOLLE CHEVROLET INC	REPAIRS TO VEHICLE	2,431.50
			TOTAL:	8,031.50
FINANCE	GENERAL FUND	MO DEPT OF REVENUE	MISSOURI WITHHOLDING	0.50
		MISSOURI LAGERS	MONTHLY CONTRIBUTIONS	229.64
		MIDWEST PUBLIC RISK	DENTAL	34.36
			OPEN ACCESS	397.22
			HSA	139.85
		HSA BANK	HSA - GRAIN VALLEY, MO	36.45
		NEW DIRECTIONS BEHAVIORAL	2ND QTR 2020	4.11
		INTERNAL REVENUE SERVICE	SOCIAL SECURITY	172.49
			MEDICARE	40.34
			TOTAL:	1,054.96

DEPARTMENT	FUND	VENDOR NAME	DESCRIPTION	AMOUNT
COURT	GENERAL FUND	CITY OF BLUE SPRINGS	PRISONER HOUSING MARCH 202	245.00
		MISSOURI LAGERS	MONTHLY CONTRIBUTIONS	144.32
		AMAZON.COM	KEURIG BREWERS/HANDSET LIF	36.99
		MISSOURI MUNICIPAL AND ASSOCIATE CIRCU	WATKINS MEMEBERSHIP 2020	325.00
		MIDWEST PUBLIC RISK	DENTAL	17.59
			HSA	287.74
		HSA BANK	HSA - GRAIN VALLEY, MO	75.00
		NEW DIRECTIONS BEHAVIORAL	2ND QTR 2020	4.11
		MERCHANT SERVICES	MAR 20 MONTHLY FEES	28.41
		RAY COUNTY SHERIFFS DEPARTMENT	MARCH 2020	360.00
		ROSS MILLER CLEANERS	MAR 2020 CLEANING	32.50
		LAUBER MUNICIPAL LAW LLC	CITY ATTORNEY	4,637.50
			RH PERSONNEL ISSUE	2,922.50
		INTERNAL REVENUE SERVICE	SOCIAL SECURITY	170.25
			MEDICARE	39.81
			TOTAL:	9,326.72
VICTIM SERVICES	GENERAL FUND	MISSOURI LAGERS	MONTHLY CONTRIBUTIONS	127.32
		MIDWEST PUBLIC RISK	DENTAL	34.56
			HSA	624.41
		HSA BANK	HSA - GRAIN VALLEY, MO	100.00
		NEW DIRECTIONS BEHAVIORAL	2ND QTR 2020	4.11
		INTERNAL REVENUE SERVICE	SOCIAL SECURITY	139.12
			MEDICARE	32.54
			TOTAL:	1,062.06
FLEET	GENERAL FUND	MISSOURI LAGERS	MONTHLY CONTRIBUTIONS	73.33
		ADVANCE AUTO PARTS	OIL FILTER	38.88
			BT PLUS 12V 1.25A	46.89
			BRAKE CLEANER/HLDRMIN LNLN	32.96
			NITRILE BLK X 100/12OZ SMA	74.70
		FASTENAL COMPANY	5/8-113.5 Z 5 KEG	31.09
		SAFETY-KLEEN	OIL SERVICE/USED OIL RECYC	102.50
		MIDWEST PUBLIC RISK	DENTAL	17.84
			HSA	148.52
		HSA BANK	HSA - GRAIN VALLEY, MO	38.71
		NEW DIRECTIONS BEHAVIORAL	2ND QTR 2020	2.06
		CINTAS CORPORATION # 430	PW/WOLTZ UNIFORMS	9.92
			PW/WOLTZ UNIFORMS	9.92
			PW/WOLTZ UNIFORMS	9.92
		INTERNAL REVENUE SERVICE	SOCIAL SECURITY	57.25
			MEDICARE	13.39
			TOTAL:	707.88
POLICE	GENERAL FUND	RICOH USA INC	PD C85162116	56.29
			PD C85162119	138.29
			PD 85162124	11.67
		MISSOURI LAGERS	EMPLOYER CONTRIBUTIONS	3,971.13
			MONTHLY CONTRIBUTIONS	365.35
		SAMS CLUB/GECRB	KITCHEN SUPPLIES	96.22
		OFFICE DEPOT	PAPER/TAPE/PEN/DUSTER	95.16
			NOTEBOOK	56.28
		VISA-CARD SERVICES 1325	2020 MO CRISIS REFUND	50.00-
		BEST BUY	PRINTERS	166.74
		OREILLY AUTOMOTIVE INC	GROUND STRAP	12.40
		RICOH USA INC	PD C85162116	228.22

DEPARTMENT	FUND	VENDOR NAME	DESCRIPTION	AMOUNT
			PD C85162119	228.22
			PD DESK C85162124	32.71
		HAMPEL OIL INC	BULK GASOHOL/DIESEL	1,235.34
			BULK GASOHOL/DIESEL	214.84
		COMCAST	HIGH SPEED INTERNET	149.85
		LEXISNEXIS RISK DATA MGMT INC	MAR 2020 MINIMUM COMMITMEN	150.00
		GOODYEAR COMMERCIAL TIRE	GY245/55R18 EAG RSA VSB	406.50
		MIDWEST PUBLIC RISK	DENTAL	211.08
			DENTAL	483.84
			OPEN ACCESS	720.78
			OPEN ACCESS	1,564.10
			OPEN ACCESS	688.35
			HSA	949.58
			HSA	3,165.14
			HSA	4,370.87
			HSA	549.59
		HSA BANK	HSA - GRAIN VALLEY, MO	825.00
			HSA - GRAIN VALLEY, MO	1,000.00
		NEW DIRECTIONS BEHAVIORAL	2ND QTR 2020	102.75
		ROBERTS CHEVROLET BUICK	TAHOE	35,192.50
		CHEWY.COM	DRY DOG FOOD	64.60
		MOTOROLA SOLUTIONS INC	REMOTE SHOULDER MIC	141.24
			APX6000 PORT. RADIO	8,486.80
			BATTERY	195.60
			CHARGER	198.00
		LEES SUMMIT	SEAT BELT	256.00
		24HOURWRISTBANDS.COM	CAMP FOCUS WRIST BANDS	60.00
		MIRROR IMAGE EXPRESS CARWASH	MAR 2020 VEHICLE WASHES	24.00
		ROSS MILLER CLEANERS	MAR 2020 CLEANING	40.21
		INTERNAL REVENUE SERVICE	SOCIAL SECURITY	3,044.37
			MEDICARE	711.98
			TOTAL:	70,611.59
ANIMAL CONTROL	GENERAL FUND	MISSOURI LAGERS	MONTHLY CONTRIBUTIONS	108.66
		ADVANCE AUTO PARTS	HEADLIGHT XTRA VISION	23.79
		HAMPEL OIL INC	BULK GASOHOL/DIESEL	112.97
		MIDWEST PUBLIC RISK	OPEN ACCESS	360.39
		NEW DIRECTIONS BEHAVIORAL	2ND QTR 2020	4.11
		ASPEN PET CREMATIONS	ASPEN PET CREMATIONS	78.09
		INTERNAL REVENUE SERVICE	SOCIAL SECURITY	85.27
			MEDICARE	19.94
			TOTAL:	793.22
PLANNING & ENGINEERING	GENERAL FUND	MID-AMERICA REGIONAL COUNCIL	Aerial Photography	359.26
		MISSOURI LAGERS	MONTHLY CONTRIBUTIONS	513.13
		SAMS CLUB/GECRB	KITCHEN SUPPLIES	64.42
		OFFICE DEPOT	PAPER/TAPE/PEN/DUSTER	101.71
		HAMPEL OIL INC	BULK GASOHOL/DIESEL	25.77
		INTERNATIONAL CODE COUNCIL INC	RUSSELL MEMBERSHIP DUES	135.00
		MIDWEST PUBLIC RISK	DENTAL	48.15
			DENTAL	10.11
			OPEN ACCESS	103.25
			HSA	787.63
			HSA	78.24
		HSA BANK	HSA - GRAIN VALLEY, MO	205.29
			HSA - GRAIN VALLEY, MO	14.24

DEPARTMENT	FUND	VENDOR NAME	DESCRIPTION	AMOUNT
		NEW DIRECTIONS BEHAVIORAL	2ND QTR 2020	13.77
		THE EXAMINER	RFP: BUILDING MAINTENANCE	47.04
		INTERNAL REVENUE SERVICE	SOCIAL SECURITY	394.00
			MEDICARE	92.17
			TOTAL:	2,993.18
NON-DEPARTMENTAL	PARK FUND	KCMO CITY TREASURER	KC EARNINGS TAX WH	21.36
		MO DEPT OF REVENUE	MISSOURI WITHHOLDING	410.99
		FAMILY SUPPORT PAYMENT CENTER	SMITH CASE 91316387	92.31
		AFLAC	AFLAC CRITICAL CARE	6.78
			AFLAC PRETAX	54.44
			AFLAC-W2 DD PRETAX	71.29
		MISCELLANEOUS	TARA BARNDT:	150.00
			JASON CROWNOVER:	150.00
			KAYLYNN ALLEN:	150.00
			DEAN DICKEY:	2,235.00
			NINA SEARS:	50.00
		MIDWEST PUBLIC RISK	DENTAL	30.95
			OPEN ACCESS	22.35
			HSA	312.00
			HSA	17.53
			VISION	15.48
			VISION	12.11
			VISION	1.08
		HSA BANK	HSA - GRAIN VALLEY, MO	75.00
			HSA - GRAIN VALLEY, MO	46.80
		CITY OF GRAIN VALLEY -FLEX	FLEX - DEPENDENT CARE	195.00
		ICMA RC	ICMA 457 %	171.72
			ICMA 457	536.54
			ICMA ROTH IRA	46.88
			ICMA ROTH IRA	3.40
		INTERNAL REVENUE SERVICE	FEDERAL WH	1,110.01
			SOCIAL SECURITY	766.45
			MEDICARE	179.27
			TOTAL:	6,934.74
PARK ADMIN	PARK FUND	NETSTANDARD INC	NETSTANDARD CLARITY	618.00
		MISSOURI LAGERS	MONTHLY CONTRIBUTIONS	526.56
		AT&T	U-VERSE PARK MAINTENANCE	69.55
		AMAZON.COM	NIKON D3500 DSLR CAMERA	439.95
		FACEBOOK INC	EMPLOYEMENT AD	2.82
		HAMPEL OIL INC	BULK GASOHOL/DIESEL	201.26
		COMCAST	CITY HALL PHONE CHARGES	59.66
		MIDWEST PUBLIC RISK	DENTAL	3.36
			DENTAL	82.58
			OPEN ACCESS	34.95
			OPEN ACCESS	76.97
			HSA	995.81
			HSA	54.90
			HSA	60.39
		HSA BANK	HSA - GRAIN VALLEY, MO	14.31
			HSA - GRAIN VALLEY, MO	219.41
		NEW DIRECTIONS BEHAVIORAL	2ND QTR 2020	10.69
		OPEN AIR CINEMA LLC	OUTDOOR MOVIE SCREEN	4,716.78
		BLOOMS FRESH	MEYER: FLOWERS	93.98
		INTERNAL REVENUE SERVICE	SOCIAL SECURITY	379.29

DEPARTMENT	FUND	VENDOR NAME	DESCRIPTION	AMOUNT
			MEDICARE	88.71
			TOTAL:	8,749.93
PARKS STAFF	PARK FUND	MISSOURI LAGERS	MONTHLY CONTRIBUTIONS	375.92
		AMAZON.COM	REPELLENT TAPE	21.09
			MOWER BLADES	248.85
			MOWER BLADES	179.98
		OREILLY AUTOMOTIVE INC	5GALTRACTRFL/OIL FILTER/AI	121.55
			5GALTRACTRFL	111.98
			HYD FILTER	15.81
			OIL FILTER/AIR FILTER/COPP	52.79
			AIR FILTER	13.99
			5GALTRACTRFL/OIL FILTER/AI	119.37
			FUEL FILTER	13.54
		SITEONE LANDSCAPE SUPPLY LLC	WEED KILER FOR BALLFIELDS	204.59
		MIDWEST PUBLIC RISK	DENTAL	35.18
			DENTAL	34.56
			HSA	474.79
			HSA	575.48
		HSA BANK	HSA - GRAIN VALLEY, MO	150.00
			HSA - GRAIN VALLEY, MO	100.00
		NEW DIRECTIONS BEHAVIORAL	2ND QTR 2020	12.33
		SPIRE	600 BUCKNER TARSNEY	66.21
			624 JAMES ROLLO CT	10.51
		LAWN & LEISURE	V BELT	98.23
		INTERNAL REVENUE SERVICE	SOCIAL SECURITY	279.36
			MEDICARE	65.34
			TOTAL:	3,381.45
COMMUNITY CENTER	PARK FUND	AAA DISPOSAL SERVICE INC	MAR 20 SERVICE	65.00
		RICOH USA INC	COMM CTR C85162114	53.67
			COMM CTR C85162123	11.00
		MISSOURI LAGERS	MONTHLY CONTRIBUTIONS	138.38
		SAMS CLUB/GECRB	JANITORIAL SUPPLIES	63.12
		AUTHORIZE.NET	MAR SIGNUPS	56.00
		HOUSE OF VACUUMS	VACUUM REPAIR	55.95
		RICOH USA INC	PR C85162114	228.22
			CC DESK C85162123	32.68
		GOPHER SPORT	GYM VOLLEYBALLS	122.67
		MIDWEST PUBLIC RISK	DENTAL	17.59
			HSA	287.74
		HSA BANK	HSA - GRAIN VALLEY, MO	75.00
		NEW DIRECTIONS BEHAVIORAL	2ND QTR 2020	4.11
		SPIRE	713 S MAIN ST	180.07
			713 S MAIN ST A	35.27
		MEYER LABORATORY INC	HAND SANITIZER	28.40
			SUPPLIES	396.00
		MERCHANT SERVICES	MAR 20 MONTHLY FEES	434.29
			MAR 20 MONTHLY FEES	4.08
		DAYMARK SOLUTIONS INC		447.50
		INTERNAL REVENUE SERVICE	SOCIAL SECURITY	107.80
			MEDICARE	25.22
			TOTAL:	2,869.76
POOL	PARK FUND	DAYMARK SOLUTIONS INC		447.50
			TOTAL:	447.50

DEPARTMENT	FUND	VENDOR NAME	DESCRIPTION	AMOUNT
NON-DEPARTMENTAL	TRANSPORTATION	MO DEPT OF REVENUE	MISSOURI WITHHOLDING	143.21
		FAMILY SUPPORT PAYMENT CENTER	DZEKUNSKAS CASE 41452523	30.00
		AFLAC	AFLAC PRETAX	4.64
			AFLAC-W2 DD PRETAX	8.05
		MIDWEST PUBLIC RISK	DENTAL	17.31
			OPEN ACCESS	25.23
			OPEN ACCESS	26.49
			HSA	60.44
			HSA	72.52
			HSA	76.47
			VISION	3.10
			VISION	1.33
			VISION	2.19
			VISION	5.54
		HSA BANK	HSA - GRAIN VALLEY, MO	14.94
			HSA - GRAIN VALLEY, MO	79.01
		ICMA RC	ICMA 457	19.31
			ICMA ROTH IRA	30.00
		INTERNAL REVENUE SERVICE	FEDERAL WH	394.79
			SOCIAL SECURITY	280.06
			MEDICARE	65.50
			TOTAL:	1,360.13
TRANSPORTATION	TRANSPORTATION	NETSTANDARD INC	MAR DATASAFE BACKUPS	200.00
			NETSTANDARD CLARITY	370.80
		CARTER WATERS	K SATUROCK PREMIUM	179.00
			K SATURUCK PREMIUM	268.50
		RICOH USA INC	PW C85162113	11.29
		MO DEPT OF NATURAL RESOURCES	13461 ELLEDGE	9.00
		MISSOURI LAGERS	MONTHLY CONTRIBUTIONS	367.86
		PETTY CASH	SNOW TEAM A MEALS	4.22
			SNOW TEAM B MEALS	8.41
		ADVANCE AUTO PARTS	BATTERY	19.29
		SHERWIN WILLIAMS	STREET MARKING	114.95
		OFFICE DEPOT	PAPER/TAPE/PEN/DUSTER	4.92
			RISER	4.93
		OREILLY AUTOMOTIVE INC	OIL F ILTER/HYD FILTER	7.57
		BLUE SPRINGS WINWATER CO	2-1/2 LIQUID FILLED GAUGE	7.60
		RICOH USA INC	PW C85162113	45.64
		HAMPEL OIL INC	BULK GASOHOL/DIESEL	95.41
		FASTENAL COMPANY	CAUTION TAPE	14.06
			REPAIR TRAILER DECKS	11.86
		HOME DEPOT CREDIT SERVICES	SIDE BOARDS/TRAILER DECKS	13.00
			SOCKET	2.95
			CUT OFF DISC/PLIERS SET/SC	23.15
		COMCAST	CITY HALL PHONE CHARGES	35.79
		KC WHOLESALE	PINTLE HITCH/SEAL	38.31
		MIDWEST PUBLIC RISK	DENTAL	13.91
			DENTAL	65.40
			OPEN ACCESS	118.92
			OPEN ACCESS	72.08
			OPEN ACCESS	103.25
			HSA	284.88
			HSA	169.87
			HSA	249.76
			HSA	298.07

DEPARTMENT	FUND	VENDOR NAME		DESCRIPTION	AMOUNT
		HSA BANK		HSA - GRAIN VALLEY, MO	29.27
				HSA - GRAIN VALLEY, MO	154.24
		NEW DIRECTIONS BEHAVIORAL		2ND QTR 2020	11.10
		SPIRE		405 JAMES ROLLO DR	37.12
				624 JAMES ROLLO CT	21.05
				711 S MAIN ST	4.18
				618 JAMES ROLLO CT	16.76
		CDW GOVERNMENT		Storage for Digitizing	306.80
				Storage for Digitizing	162.64
		CINTAS CORPORATION # 430		PW/WOLTZ UNIFORMS	42.40
				PW/WOLTZ UNIFORMS	26.21
				PW/WOLTZ UNIFORMS	26.19
		INTERNAL REVENUE SERVICE		SOCIAL SECURITY	280.05
				MEDICARE	65.50
				TOTAL:	4,418.16
CAPITAL IMPROVEMENTS	CAPITAL PROJECTS F	SAPP DESIGN ASSOCIATES ARCHITECTS		MARCH INVOICE FOR GVCC	1,197.42
				TOTAL:	1,197.42
NON-DEPARTMENTAL	WATER/SEWER FUND	KCMO CITY TREASURER		KC EARNINGS TAX WH	8.43
		MO DEPT OF REVENUE		MISSOURI WITHHOLDING	1,002.75
		FAMILY SUPPORT PAYMENT CENTER		DZEKUNSKAS CASE 41452523	120.00
		AFLAC		AFLAC PRETAX	36.15
				AFLAC-W2 DD PRETAX	88.56
		MISCELLANEOUS	PASSLER, MAXWELL	10-135900-04	14.62
			SCANLON, CALLIE	10-138200-05	17.83
			DAILEY, JOHN	10-204400-07	2.36
			HARLEYS SALOON	10-210100-07	59.36
			BUCCHI, MIKAYLA	10-216800-15	45.89
			ATTAWAY, DONNY	10-239200-09	0.33
			BYRNS, RICHARD	10-252600-14	54.05
			ZUBRICK, DONNA	10-253100-09	65.52
			RED CROSS PHARMACY	10-253450-01	64.22
			NOTEIS, ADAM	10-383200-09	15.54
			POKE PROPERTIES, LLC	10-435440-03	15.54
			COULSON, CURTIS	10-474200-02	44.25
			DAVID ARNOLD CONSTRU	10-487433-00	32.83
			VANKE, RICHARD	10-503820-08	23.43
			VUNCANON, HEATHER	10-505520-05	15.54
			ROTHWELL CONSTRUCTIO	10-801110-03	881.14
			POWELL, RICHARD	10-820383-02	65.65
			RODRIGUEZ, DIANA	10-900400-06	1.89
		MIDWEST PUBLIC RISK		DENTAL	108.49
				OPEN ACCESS	100.90
				OPEN ACCESS	89.38
				OPEN ACCESS	123.61
				HSA	280.98
				HSA	541.45
				HSA	467.45
				VISION	12.38
				VISION	9.86
				VISION	13.07
				VISION	24.06
		HSA BANK		HSA - GRAIN VALLEY, MO	108.76
				HSA - GRAIN VALLEY, MO	431.18
		CITY OF GRAIN VALLEY -FLEX		FLEX - DEPENDENT CARE	159.99

DEPARTMENT	FUND	VENDOR NAME	DESCRIPTION	AMOUNT
		ICMA RC	ICMA 457 %	74.99
			ICMA 457	200.26
			ICMA ROTH IRA	144.31
		INTERNAL REVENUE SERVICE	FEDERAL WH	2,956.85
			SOCIAL SECURITY	1,921.25
			MEDICARE	449.31
			TOTAL:	10,894.41
WATER	WATER/SEWER FUND	AAA DISPOSAL SERVICE INC	MAR 20 SERVICE	38.75
		NETSTANDARD INC	MAR DATASAFE BACKUPS	400.00
			NETSTANDARD CLARITY	741.60
		PEREGRINE CORPORATION	20 BILL PRINT & MAIL	433.81
			20 BILL PRINT & MAIL	83.26
		RICOH USA INC	PW C85162113	22.60
			CD C85162115	62.51
		MO DEPT OF NATURAL RESOURCES	13461 ELLEDGE	18.00
		MISSOURI LAGERS	MONTHLY CONTRIBUTIONS	1,269.63
		PETTY CASH	SNOW TEAM A MEALS	8.45
			SNOW TEAM B MEALS	16.83
		ADVANCE AUTO PARTS	BATTERY	38.59
		VANCO SERVICES LLC	MAR 2020 GATEWAY ES20605	74.78
		OFFICE DEPOT	PAPER/TAPE/PEN/DUSTER	9.86
			RISER	9.85
		OREILLY AUTOMOTIVE INC	OIL F ILTER/HYD FILTER	15.16
		MISSOURI ONE CALL SYSTEM INC	MAR 324 LOCATES	405.00
		BLUE SPRINGS WINWATER CO	5/8 X 3/4 RUBBER METER GSK	104.00
			CHLORINE GRANULAR	88.00
			2-1/2 LIQUID FILLED GAUGE	15.20
		RICOH USA INC	PW C85162113	91.29
			CD C85162115	114.11
		HAMPEL OIL INC	BULK GASOHOL/DIESEL	190.78
		FASTENAL COMPANY	CAUTION TAPE	28.14
			REPAIR TRAILER DECKS	23.71
		UTILITY SERVICE CO INC	ANNUAL SERVICE CONTRACT	14,251.65
		HOME DEPOT CREDIT SERVICES	SIDE BOARDS/TRAILER DECKS	26.02
			SOCKET	5.90
			CUT OFF DISC/PLIERS SET/SC	46.32
		COMCAST	CITY HALL PHONE CHARGES	71.59
		KC WHOLESALE	PINTLE HITCH/SEAL	76.64
		MIDWEST PUBLIC RISK	DENTAL	43.07
			DENTAL	205.37
			OPEN ACCESS	237.86
			OPEN ACCESS	214.06
			OPEN ACCESS	153.93
			OPEN ACCESS	240.93
			HSA	662.21
			HSA	663.06
			HSA	932.50
			HSA	911.03
		HSA BANK	HSA - GRAIN VALLEY, MO	142.83
			HSA - GRAIN VALLEY, MO	454.58
		SC REALTY SERVICES	Janitorial Services	95.70
		NEW DIRECTIONS BEHAVIORAL	2ND QTR 2020	34.11
		SPIRE	405 JAMES ROLLO DR	74.18
			624 JAMES ROLLO CT	26.29
			711 S MAIN ST	8.35

DEPARTMENT	FUND	VENDOR NAME	DESCRIPTION	AMOUNT
			618 JAMES ROLLO CT	33.57
		CORE & MAIN LP	HYDRANT OIL	245.85
		CDW GOVERNMENT	Storage for Digitizing	613.60
			Storage for Digitizing	325.28
		CINTAS CORPORATION # 430	PW/WOLTZ UNIFORMS	84.78
			PW/WOLTZ UNIFORMS	52.38
			PW/WOLTZ UNIFORMS	52.39
		MERCHANT SERVICES	MAR 20 MONTHLY FEES	988.87
			MAR 20 MONTHLY FEES	1,286.02
		TYLER TECHNOLOGIES INC	INSITE TRANSACTION FEES	319.17
		CATHERINE V. BOWDEN	MAR 2020 COLSULTING	675.00
		INTERNAL REVENUE SERVICE	SOCIAL SECURITY	960.61
			MEDICARE	224.65
			TOTAL:	29,744.26
SEWER	WATER/SEWER FUND	AAA DISPOSAL SERVICE INC	MAR 20 SERVICE	38.75
		NETSTANDARD INC	MAR DATASAFE BACKUPS	400.00
			NETSTANDARD CLARITY	741.60
		PEREGRINE CORPORATION	20 BILL PRINT & MAIL	433.82
			20 BILL PRINT & MAIL	83.27
		RICOH USA INC	PW C85162113	22.60
			CD C85162115	62.50
		MO DEPT OF NATURAL RESOURCES	13461 ELLEDGE	18.00
		MISSOURI LAGERS	MONTHLY CONTRIBUTIONS	1,269.60
		PETTY CASH	SNOW TEAM A MEALS	8.45
			SNOW TEAM B MEALS	16.83
		ADVANCE AUTO PARTS	BATTERY	38.59
		VANCO SERVICES LLC	MAR 2020 GATEWAY ES20605	74.78
		OFFICE DEPOT	PAPER/TAPE/PEN/DUSTER	9.86
			RISER	9.86
		OREILLY AUTOMOTIVE INC	OIL F ILTER/HYD FILTER	15.16
		BLUE SPRINGS WINWATER CO	GREEN MARKING FLAGS/ WIRE	104.00
			GREEN MARKING FLAGS/ WIRE	156.00
			2-1/2 LIQUID FILLED GAUGE	15.20
		RICOH USA INC	PW C85162113	91.29
			CD C85162115	114.11
		HAMPEL OIL INC	BULK GASOHOL/DIESEL	190.78
		FASTENAL COMPANY	CAUTION TAPE	28.14
			REPAIR TRAILER DECKS	23.71
		HOME DEPOT CREDIT SERVICES	SIDE BOARDS/TRAILER DECKS	26.02
			SOCKET	5.90
			CUT OFF DISC/PLIERS SET/SC	46.32
		COMCAST	CITY HALL PHONE CHARGES	71.59
		KC WHOLESALE	PINTLE HITCH/SEAL	76.64
		MIDWEST PUBLIC RISK	DENTAL	43.04
			DENTAL	205.40
			OPEN ACCESS	237.86
			OPEN ACCESS	214.04
			OPEN ACCESS	153.93
			OPEN ACCESS	240.92
			HSA	662.18
			HSA	663.08
			HSA	932.53
			HSA	911.02
		HSA BANK	HSA - GRAIN VALLEY, MO	142.85
			HSA - GRAIN VALLEY, MO	454.56

DEPARTMENT	FUND	VENDOR NAME	DESCRIPTION	AMOUNT
		SC REALTY SERVICES	Janitorial Services	95.70
		NEW DIRECTIONS BEHAVIORAL	2ND QTR 2020	34.10
		SPIRE	405 JAMES ROLLO DR	74.23
			624 JAMES ROLLO CT	26.31
			711 S MAIN ST	8.38
			618 JAMES ROLLO CT	33.57
		CDW GOVERNMENT	Storage for Digitizing	613.60
			Storage for Digitizing	325.28
		CINTAS CORPORATION # 430	PW/WOLTZ UNIFORMS	84.78
			PW/WOLTZ UNIFORMS	52.38
			PW/WOLTZ UNIFORMS	52.39
		MERCHANT SERVICES	MAR 20 MONTHLY FEES	988.87
			MAR 20 MONTHLY FEES	1,286.01
		TYLER TECHNOLOGIES INC	INSITE TRANSACTION FEES	319.18
		CATHERINE V. BOWDEN	MAR 2020 COLSULTING	675.00
		INTERNAL REVENUE SERVICE	SOCIAL SECURITY	960.65
			MEDICARE	224.66
			TOTAL:	14,909.87
NON-DEPARTMENTAL	POOLED CASH FUND	VISA-CARD SERVICES 1184	VISA-CARD SERVICES 1184	427.60
		VISA-CARD SERVICES 1325	VISA-CARD SERVICES 1325	291.34
		VISA-CARD SERVICES 9016	VISA-CARD SERVICES 9016	111.36
		VISA-CARD SERVICES 1788	VISA-CARD SERVICES 1788	250.94
		VISA-CARD SERVICES 9313	VISA-CARD SERVICES 9313	1,144.62
		VISA-CARD SERVICES 9321	VISA-CARD SERVICES 9321	135.00
			TOTAL:	2,360.86

========== FUND TOTALS ==========

100	GENERAL FUND	132,188.30
200	PARK FUND	22,383.38
210	TRANSPORTATION	5,778.29
280	CAPITAL PROJECTS FUND	1,197.42
600	WATER/SEWER FUND	55,548.54
999	POOLED CASH FUND	2,360.86
	GRAND TOTAL:	219,456.79

TOTAL PAGES: 11

SELECTION CRITERIA

SELECTION OPTIONS

VENDOR SET: 01-CITY OF GRAIN VALLEY
VENDOR: All
CLASSIFICATION: All
BANK CODE: All
ITEM DATE: 4/04/2020 THRU 4/17/2020
ITEM AMOUNT: 99,999,999.00CR THRU 99,999,999.00
GL POST DATE: 0/00/0000 THRU 99/99/9999
CHECK DATE: 0/00/0000 THRU 99/99/9999

PAYROLL SELECTION

PAYROLL EXPENSES: NO
EXPENSE TYPE: N/A
CHECK DATE: 0/00/0000 THRU 99/99/9999

PRINT OPTIONS

PRINT DATE: None
SEQUENCE: By Department
DESCRIPTION: Distribution
GL ACCTS: NO
REPORT TITLE: C O U N C I L R E P O R T
SIGNATURE LINES: 0

PACKET OPTIONS

INCLUDE REFUNDS: YES
INCLUDE OPEN ITEM:YES

Ordinances

INTENTIONALLY LEFT BLANK

CITY OF GRAIN VALLEY BOARD OF ALDERMEN AGENDA ITEM		
MEETING DATE	12/09/2013, 4/27/2020	
BILL NUMBER	B20-09	
AGENDA TITLE	**AN ORDINANCE APPROVING REDEVELOPMENT PROJECT 1B OF THE GRAIN VALLEY INTERCHANGE TAX INCREMENT FINANCING PLAN AS A REDEVELOPMENT PROJECT AND ADOPTING TAX INCREMENT FINANCING THEREIN**	
REQUESTING DEPARTMENT	Legal	
PRESENTER	Lauber Municipal Law	
FISCAL INFORMATION	Cost as recommended:	Not Applicable
	Budget Line Item:	Not Applicable
	Balance Available	Not Applicable
	New Appropriation Required:	[ ] Yes [X] No
PURPOSE	To approve redevelopment Project 1B	
BACKGROUND	See Memo	
SPECIAL NOTES	None	
ANALYSIS	None	

PUBLIC INFORMATION PROCESS	45-day notice letters were mailed certified return receipt to Taxing Jurisdictions on September 30, 2013. A 45-day notice was published in *The Blue Springs Examiner* on October 18, 2013. The Grain Valley Interchange (Projects 1A, 1B, 3 and 4) Tax Increment Financing Plan an Amendment to the Grain Valley Marketplace Tax Increment Financing Plan was filed with the Office of the City Clerk on October 31, 2013. 10-day Tax Payer Notices were mailed certified return receipt on November 1, 2013. A 10-day notice was published in *The Blue Springs Examiner* on November 5, 2013. The Tax Increment Financing Commission held a Public Hearing Notice on November 14, 2013.
BOARD OR COMMISSION RECOMMENDATION	The Tax Increment Financing Commission approved Resolution Number 2013-01 on November 14, 2013.
DEPARTMENT RECOMMENDATION	Staff Recommends Approval
REFERENCE DOCUMENTS ATTACHED	Ordinance, Memo, & Staff Report

CITY OF GRAIN VALLEY **STATE OF MISSOURI**

BILL NO. *B20-09* ORDINANCE NO. _____
SECOND READING _____
FIRST READING *December 9, 2013 (6-0)*

AN ORDINANCE APPROVING REDEVELOPMENT PROJECT 1B OF THE GRAIN VALLEY INTERCHANGE TAX INCREMENT FINANCING PLAN AS A REDEVELOPMENT PROJECT AND ADOPTING TAX INCREMENT FINANCING THEREIN

WHEREAS, on September 27, 2010, the City of Grain Valley, Missouri (the "City") adopted the Grain Valley Marketplace Tax Increment Financing Plan (the "Original Plan") by Ordinance No. 2107 and designated the Redevelopment Area, described therein, as a blighted area, all pursuant to the provisions of the Real Property Tax Increment Allocation Act, Sections 99.800 to 99.865, RSMo (the "Act"); and

WHEREAS, on December 9, 2013, the City approved by Ordinance No. *2322*, an amendment to the Original Plan, entitled the Grain Valley Interchange (Projects 1A, 1B, 3, and 4) Tax Increment Financing Plan an Amendment to the Grain Valley Marketplace Tax Increment Financing Plan (the "Amended Plan"); and

WHEREAS, the Amended Plan contemplates implementation through Redevelopment Projects designated as the Redevelopment Project 1A, Redevelopment Project 1B, Redevelopment Project 3, and Redevelopment Project 4, and the adoption of tax increment financing in the area selected for each Redevelopment Project.

NOW THEREFORE, BE IT ORDAINED by the Board of Aldermen of the City of Grain Valley, Missouri as follows:

SECTION 1: That the area selected for Redevelopment Project 1B legally described in **Exhibit A** attached hereto is approved and designated as a Redevelopment Project (hereinafter referred to as "Project 1B"). Project 1B includes only those parcels of real property and improvements thereon which will be directly and substantially benefited by the Redevelopment Project improvements therein.

SECTION 2: That tax increment allocation financing is hereby adopted for taxable real property in the above-described area selected for Project 1B. Pursuant to the Act, after the total equalized assessed valuation of the taxable real property in Project 1B exceeds the certified total initial equalized assessed valuation of the taxable real property in Project 1B, the ad valorem taxes, and payments in lieu of taxes, if any, arising from the levies upon the taxable real property in such project by taxing districts and tax rates determined in the manner provided in subsection 2 of Section 99.855, RSMo, each year after the effective date of the ordinance until the sooner of the expiration of 23 years, or when redevelopment costs have been paid and all reimbursable project costs have been reimbursed pursuant to the Redevelopment Plan shall be divided as follows:

a. That portion of taxes, penalties and interest levied upon each taxable lot, block, tract, or parcel of real property which is attributable to the initial equalized value of each such taxable lot, block, tract or parcel of property in the area selected for Project 1B shall be allocated to and, when collected, shall be paid by the Jackson County Collector and the City Treasurer to the respective affected taxing districts in the manner required by law in the absence of the adoption of tax increment allocation financing.

b. Payments in lieu of taxes attributable to the increase in the current equalized assessed valuation of each taxable lot, block, tract or parcel of real property in the area selected for Project 1B, and any applicable penalty and interest over and above the initial equalized assessed value of each such unit of property shall be allocated to and, when collected, shall be paid to the City Treasurer who shall deposit such payment in lieu of taxes into a special fund called the "Special Allocation Fund" of the City for the purpose of paying Redevelopment Project Costs and obligations incurred in the payment thereof.

SECTION 3: That in addition to the payments in lieu of taxes described in subsection b of Section 2 above, fifty percent (50%) of the total additional revenue from taxes, penalties and interest which are imposed by the City or taxing districts, and which are generated by economic activities within the area selected for Project 1B over the amount of such taxes generated by economic activities within such area in the calendar year prior to the adoption of this ordinance, while tax increment financing remains in effect, but excluding personal property taxes, taxes imposed on sales of charges for sleeping rooms paid by transient guests of hotels and motels, taxes levied pursuant to Section 70.500 RSMo, taxes levied for the purpose of public transportation pursuant to section 94.660, RSMo, licenses, fees or special assessments, other than payments in lieu of taxes, and penalties and interest thereon, or any sales tax imposed by a county with a charter form of government and with more than six hundred thousand but fewer than seven hundred thousand inhabitants, for the purpose of sports stadium improvement, shall be allocated to, and paid by the local political subdivision collecting officer to the City Treasurer or other designated financial officer of the City, who shall deposit such funds in a separate segregated account within the Special Allocation Fund.

SECTION 4: This ordinance shall be in full force and effect from and after its passage and approval by the Mayor and Board of Aldermen.

Read two times and PASSED by the Board of Aldermen this ____ day of _____, 2020, the aye and nay votes being recorded as follows:

ALDERMAN BASS	_____	ALDERMAN CLEAVER	_____
ALDERMAN HEADLEY	_____	ALDERMAN STRATTON	_____
ALDERMAN TOTTON	_____	ALDERMAN WEST	_____

Mayor _____ (in the event of a tie only)

Approved as to form:

_____	_____
Lauber Municipal Law City Attorney	Mike Todd Mayor

ATTEST:

_____
Jamie Logan
City Clerk

INTENTIONALLY LEFT BLANK

CITY OF GRAIN VALLEY BOARD OF ALDERMEN AGENDA ITEM		
MEETING DATE	12/09/2013, 4/27/2020	
BILL NUMBER	B20-10	
AGENDA TITLE	**AN ORDINANCE APPROVING REDEVELOPMENT PROJECT 3 OF THE GRAIN VALLEY INTERCHANGE TAX INCREMENT FINANCING PLAN AS A REDEVELOPMENT PROJECT AND ADOPTING TAX INCREMENT FINANCING THEREIN**	
REQUESTING DEPARTMENT	Legal	
PRESENTER	Lauber Municipal Law	
FISCAL INFORMATION	Cost as recommended:	Not Applicable
	Budget Line Item:	Not Applicable
	Balance Available	Not Applicable
	New Appropriation Required:	[ ] Yes [X] No
PURPOSE	To approve redevelopment Project 3	
BACKGROUND	See Memo	
SPECIAL NOTES	None	
ANALYSIS	None	

PUBLIC INFORMATION PROCESS	45-day notice letters were mailed certified return receipt to Taxing Jurisdictions on September 30, 2013. A 45-day notice was published in *The Blue Springs Examiner* on October 18, 2013. The Grain Valley Interchange (Projects 1A, 1B, 3 and 4) Tax Increment Financing Plan an Amendment to the Grain Valley Marketplace Tax Increment Financing Plan was filed with the Office of the City Clerk on October 31, 2013. 10-day Tax Payer Notices were mailed certified return receipt on November 1, 2013. A 10-day notice was published in *The Blue Springs Examiner* on November 5, 2013. The Tax Increment Financing Commission held a Public Hearing Notice on November 14, 2013.
BOARD OR COMMISSION RECOMMENDATION	The Tax Increment Financing Commission approved Resolution Number 2013-01 on November 14, 2013.
DEPARTMENT RECOMMENDATION	Staff Recommends Approval
REFERENCE DOCUMENTS ATTACHED	Ordinance, Memo, & Staff Report

CITY OF GRAIN VALLEY **STATE OF MISSOURI**

BILL NO. *B20-10* ORDINANCE NO. _____
SECOND READING _____
FIRST READING *December 9, 2013 (6-0)*

AN ORDINANCE APPROVING REDEVELOPMENT PROJECT 3 OF THE GRAIN VALLEY INTERCHANGE TAX INCREMENT FINANCING PLAN AS A REDEVELOPMENT PROJECT AND ADOPTING TAX INCREMENT FINANCING THEREIN

WHEREAS, on September 27, 2010, the City of Grain Valley, Missouri (the "City") adopted the Grain Valley Marketplace Tax Increment Financing Plan (the "Original Plan") by Ordinance No. 2107 and designated the Redevelopment Area, described therein, as a blighted area, all pursuant to the provisions of the Real Property Tax Increment Allocation Act, Sections 99.800 to 99.865, RSMo (the "Act"); and

WHEREAS, on December 9, 2013, the City approved by Ordinance No. *2322*, an amendment to the Original Plan, entitled the Grain Valley Interchange (Projects 1A, 1B, 3, and 4) Tax Increment Financing Plan an Amendment to the Grain Valley Marketplace Tax Increment Financing Plan (the "Amended Plan"); and

WHEREAS, the Amended Plan contemplates implementation through Redevelopment Projects designated as the Redevelopment Project 1A, Redevelopment Project 1B, Redevelopment Project 3, and Redevelopment Project 4, and the adoption of tax increment financing in the area selected for each Redevelopment Project.

NOW THEREFORE, BE IT ORDAINED by the Board of Aldermen of the City of Grain Valley, Missouri as follows:

SECTION 1: That the area selected for Redevelopment Project 3 legally described in **Exhibit A** attached hereto is approved and designated as a Redevelopment Project (hereinafter referred to as "Project 3"). Project 3 includes only those parcels of real property and improvements thereon which will be directly and substantially benefited by the Redevelopment Project improvements therein.

SECTION 2: That tax increment allocation financing is hereby adopted for taxable real property in the above-described area selected for Project 3. Pursuant to the Act, after the total equalized assessed valuation of the taxable real property in Project 3 exceeds the certified total initial equalized assessed valuation of the taxable real property in Project 3, the ad valorem taxes, and payments in lieu of taxes, if any, arising from the levies upon the taxable real property in such project by taxing districts and tax rates determined in the manner provided in subsection 2 of Section 99.855, RSMo, each year after the effective date of the ordinance until the sooner of the expiration of 23 years, or when redevelopment costs have been paid and all reimbursable project costs have been reimbursed pursuant to the Redevelopment Plan shall be divided as follows:

a. That portion of taxes, penalties and interest levied upon each taxable lot, block, tract, or parcel of real property which is attributable to the initial equalized value of each such taxable lot, block, tract or parcel of property in the area selected for Project 3 shall be allocated to and, when collected, shall be paid by the Jackson County Collector and the City Treasurer to the respective affected taxing districts in the manner required by law in the absence of the adoption of tax increment allocation financing.

b. Payments in lieu of taxes attributable to the increase in the current equalized assessed valuation of each taxable lot, block, tract or parcel of real property in the area selected for Project 3, and any applicable penalty and interest over and above the initial equalized assessed value of each such unit of property shall be allocated to and, when collected, shall be paid to the City Treasurer who shall deposit such payment in lieu of taxes into a special fund called the "Special Allocation Fund" of the City for the purpose of paying Redevelopment Project Costs and obligations incurred in the payment thereof.

SECTION 3: That in addition to the payments in lieu of taxes described in subsection b of Section 2 above, fifty percent (50%) of the total additional revenue from taxes, penalties and interest which are imposed by the City or taxing districts, and which are generated by economic activities within the area selected for Project 3 over the amount of such taxes generated by economic activities within such area in the calendar year prior to the adoption of this ordinance, while tax increment financing remains in effect, but excluding personal property taxes, taxes imposed on sales of charges for sleeping rooms paid by transient guests of hotels and motels, taxes levied pursuant to Section 70.500 RSMo, taxes levied for the purpose of public transportation pursuant to section 94.660, RSMo, licenses, fees or special assessments, other than payments in lieu of taxes, and penalties and interest thereon, or any sales tax imposed by a county with a charter form of government and with more than six hundred thousand but fewer than seven hundred thousand inhabitants, for the purpose of sports stadium improvement, shall be allocated to, and paid by the local political subdivision collecting officer to the City Treasurer or other designated financial officer of the City, who shall deposit such funds in a separate segregated account within the Special Allocation Fund.

SECTION 4: This ordinance shall be in full force and effect from and after its passage and approval by the Mayor and Board of Aldermen.

Read two times and PASSED by the Board of Aldermen this ____ day of _____, 2020, the aye and nay votes being recorded as follows:

ALDERMAN BASS	_____	ALDERMAN CLEAVER	_____
ALDERMAN HEADLEY	_____	ALDERMAN STRATTON	_____
ALDERMAN TOTTON	_____	ALDERMAN WEST	_____

Mayor _____ (in the event of a tie only)

Approved as to form:

_____	_____
Lauber Municipal Law City Attorney	Mike Todd Mayor

ATTEST:

_____
Jamie Logan
City Clerk

INTENTIONALLY LEFT BLANK

CITY OF GRAIN VALLEY BOARD OF ALDERMEN AGENDA ITEM		
MEETING DATE	12/09/2013, 4/27/2020	
BILL NUMBER	B20-11	
AGENDA TITLE	**AN ORDINANCE APPROVING REDEVELOPMENT PROJECT 4 OF THE GRAIN VALLEY INTERCHANGE TAX INCREMENT FINANCING PLAN AS A REDEVELOPMENT PROJECT AND ADOPTING TAX INCREMENT FINANCING THEREIN**	
REQUESTING DEPARTMENT	Legal	
PRESENTER	Joe Lauber, Lauber Municipal Law	
FISCAL INFORMATION	Cost as recommended:	Not Applicable
	Budget Line Item:	Not Applicable
	Balance Available	Not Applicable
	New Appropriation Required:	[ ] Yes [X] No
PURPOSE	To approve redevelopment Project 4	
BACKGROUND	See memo	
SPECIAL NOTES	None	
ANALYSIS	None	

PUBLIC INFORMATION PROCESS	45-day notice letters were mailed certified return receipt to Taxing Jurisdictions on September 30, 2013. A 45-day notice was published in *The Blue Springs Examiner* on October 18, 2013. The Grain Valley Interchange (Projects 1A, 1B, 3 and 4) Tax Increment Financing Plan an Amendment to the Grain Valley Marketplace Tax Increment Financing Plan was filed with the Office of the City Clerk on October 31, 2013. 10-day Tax Payer Notices were mailed certified return receipt on November 1, 2013. A 10-day notice was published in *The Blue Springs Examiner* on November 5, 2013. The Tax Increment Financing Commission held a Public Hearing Notice on November 14, 2013.
BOARD OR COMMISSION RECOMMENDATION	The Tax Increment Financing Commission approved Resolution Number 2013-01 on November 14, 2013.
DEPARTMENT RECOMMENDATION	Staff Recommends Approval
REFERENCE DOCUMENTS ATTACHED	Ordinance, Memo, & Staff Report

CITY OF GRAIN VALLEY **STATE OF MISSOURI**

BILL NO. *B20-11* ORDINANCE NO. _____
SECOND READING _____
FIRST READING *12/9/2013*

AN ORDINANCE APPROVING REDEVELOPMENT PROJECT 4 OF THE GRAIN VALLEY INTERCHANGE TAX INCREMENT FINANCING PLAN AS A REDEVELOPMENT PROJECT AND ADOPTING TAX INCREMENT FINANCING THEREIN

WHEREAS, on September 27, 2010, the City of Grain Valley, Missouri (the "City") adopted the Grain Valley Marketplace Tax Increment Financing Plan (the "Original Plan") by Ordinance No. 2107 and designated the Redevelopment Area, described therein, as a blighted area, all pursuant to the provisions of the Real Property Tax Increment Allocation Act, Sections 99.800 to 99.865, RSMo (the "Act"); and

WHEREAS, on December 9, 2013, the City approved by Ordinance No. *2322*, an amendment to the Original Plan, entitled the Grain Valley Interchange (Projects 1A, 1B, 3, and 4) Tax Increment Financing Plan an Amendment to the Grain Valley Marketplace Tax Increment Financing Plan (the "Amended Plan"); and

WHEREAS, the Amended Plan contemplates implementation through Redevelopment Projects designated as the Redevelopment Project 1A, Redevelopment Project 1B, Redevelopment Project 3, and Redevelopment Project 4, and the adoption of tax increment financing in the area selected for each Redevelopment Project.

NOW THEREFORE, BE IT ORDAINED by the Board of Aldermen of the City of Grain Valley, Missouri as follows:

SECTION 1: That the area selected for Redevelopment Project 4 legally described in **Exhibit A** attached hereto is approved and designated as a Redevelopment Project (hereinafter referred to as "Project 4"). Project 4 includes only those parcels of real property and improvements thereon which will be directly and substantially benefited by the Redevelopment Project improvements therein.

SECTION 2: That tax increment allocation financing is hereby adopted for taxable real property in the above-described area selected for Project 4. Pursuant to the Act, after the total equalized assessed valuation of the taxable real property in Project 4 exceeds the certified total initial equalized assessed valuation of the taxable real property in Project 4, the ad valorem taxes, and payments in lieu of taxes, if any, arising from the levies upon the taxable real property in such project by taxing districts and tax rates determined in the manner provided in subsection 2 of Section 99.855, RSMo, each year after the effective date of the ordinance until the sooner of the expiration of 23 years, or when redevelopment costs have been paid and all reimbursable project costs have been reimbursed pursuant to the Redevelopment Plan shall be divided as follows:

a. That portion of taxes, penalties and interest levied upon each taxable lot, block, tract, or parcel of real property which is attributable to the initial equalized value of each such taxable lot, block, tract or parcel of property in the area selected for Project 4 shall be allocated to and, when collected, shall be paid by the Jackson County Collector and the City Treasurer to the respective affected taxing districts in the manner required by law in the absence of the adoption of tax increment allocation financing.

b. Payments in lieu of taxes attributable to the increase in the current equalized assessed valuation of each taxable lot, block, tract or parcel of real property in the area selected for Project 4, and any applicable penalty and interest over and above the initial equalized assessed value of each such unit of property shall be allocated to and, when collected, shall be paid to the City Treasurer who shall deposit such payment in lieu of taxes into a special fund called the "Special Allocation Fund" of the City for the purpose of paying Redevelopment Project Costs and obligations incurred in the payment thereof.

SECTION 3: That in addition to the payments in lieu of taxes described in subsection b of Section 2 above, fifty percent (50%) of the total additional revenue from taxes, penalties and interest which are imposed by the City or taxing districts, and which are generated by economic activities within the area selected for Project 4 over the amount of such taxes generated by economic activities within such area in the calendar year prior to the adoption of this ordinance, while tax increment financing remains in effect, but excluding personal property taxes, taxes imposed on sales of charges for sleeping rooms paid by transient guests of hotels and motels, taxes levied pursuant to Section 70.500 RSMo, taxes levied for the purpose of public transportation pursuant to section 94.660, RSMo, licenses, fees or special assessments, other than payments in lieu of taxes, and penalties and interest thereon, or any sales tax imposed by a county with a charter form of government and with more than six hundred thousand but fewer than seven hundred thousand inhabitants, for the purpose of sports stadium improvement, shall be allocated to, and paid by the local political subdivision collecting officer to the City Treasurer or other designated financial officer of the City, who shall deposit such funds in a separate segregated account within the Special Allocation Fund.

SECTION 4: This ordinance shall be in full force and effect from and after its passage and approval by the Mayor and Board of Aldermen.

Read two times and PASSED by the Board of Aldermen this ___day of_____, *2020*, the aye and nay votes being recorded as follows:

ALDERMAN BASS	_____	ALDERMAN CLEAVER	_____
ALDERMAN HEADLEY	_____	ALDERMAN STRATTON	_____
ALDERMAN TOTTON	_____	ALDERMAN WEST	_____

Mayor _____ (in the event of a tie only)

Approved as to form:

_____	_____
Lauber Municipal Law City Attorney	Mike Todd Mayor

ATTEST:

_____
Jamie Logan
City Clerk

INTENTIONALLY LEFT BLANK

LAUBER MUNICIPAL LAW, LLC
Serving those who serve the public

MEMORANDUM

To:	Mayor and Board of Aldermen
From:	Joe Lauber, City Attorney
Date:	April 20, 2020
Re:	TIF Activation Ordinances Grain Valley Interchange TIF Projects 1B, 3, and 4

In 2010, the City of Grain Valley approved the Grain Valley Marketplace TIF Plan. This was a plan to redevelop the four corners of the I-70 interchange in northern Grain Valley. One of the most important catalysts for this development was to assist the City in securing a revenue stream that it could use to contribute $8M for a 50/50 match with MoDOT to improve the interchange.

Initially, the City had planned to do a "speculative" TIF Plan for the entire area to attract a developer or developers for redevelopment. Early in the process a developer came forward who was willing to take on what was later to be known as Project Area 2, where the B&B Theater and Casey's is located today. The original plan also provided "place saver" information about the other three project areas, which were projects 1, 3, and 4 (numbered by then City Administrator Gary Bradley based on his projection of the order in which these areas would develop). Project Area 2 was activated in 2010.

By 2013, AutoZone and McDonald's were being built in a small segment of Project Area 1. Having three additional years of information, the City decided to do an amendment of the original TIF Plan. In October 2013, the City's TIF Commission recommended approval of such amendment, which was known as the Grain Valley Interchange TIF. The amended plan provided additional projections and information about projects 1, 3, and 4- including a specific allocation of the City's portion of the cost share with MoDOT to improve the interchange. At this time, it was decided to split Project Area 1 into Project Areas 1A and 1B. Project Area 1A was activated in 2013.

The Missouri TIF Act provides that redevelopment projects may be activated up to 10 years after the adoption of a TIF Plan. "Activation" means that TIF collection is initiated—in other words, a city has up to 10 years after the approval of a TIF plan to select a developer and being the TIF collection period, which can last up to 23 years. The TIF Act also indicates that TIF activation ordinances must be "introduced in the governing body within 14 to 90 days after the close of the [TIF] commission hearing" on the TIF Plan. Because the sales tax component of TIF revenues tends to be much stronger, many cities and developers prefer to delay TIF activation until the construction of a retail project is nearly complete. Doing this avoids the situation where collection is occurring, but no retail sales are being made because the project is under construction.

Despite the rather awkward language, most cities have interpreted this to mean that an activation ordinance must be at least read the first time within 14-90 days after a TIF Commission hearing, or else a whole new hearing must be held. To do this, most cities complete the first reading, but upon a motion for the second reading a secondary motion is made to postpone indefinitely the vote on

the second reading. This action by the governing body places the bill in "ordinance limbo" until such time it is appropriate to activate TIF collection for the project. In any event a city must bring the bill back prior to the tenth anniversary of the date the TIF Plan was originally approve, or else TIF activation can never be achieved.

Fall of 2020 marks the tenth anniversary of the original TIF Plan approval for the Grain Valley Marketplace (and Interchange) TIF. Additionally, development is occurring in nearly all portions of the redevelopment areas. Thus, it is time to activate the remaining redevelopment projects for the Interchange TIF—projects 1B, 3, and 4. The Bills for these activation ordinances (B13-50, B13-51, and B13-52, respectively) have been placed on the agenda for the April 27, 2020 meeting. They were first read in December 2013 and a motion to postpone the second reading indefinitely was approved in January 2014. All that need happen at this point is for an alderman to make a motion for the second reading and then follow the City's normal process for second readings and approval of ordinances. The ordinance will be numbered in the sequential order for this year. Assuming it is approved, City staff will make sure that the appropriate persons at Jackson County and the Missouri Department of Economic Development are notified.

If you have any questions about this information, please feel free to contact me.

* * *

STAFF AND CONSULTANT REPORT TO THE BOARD OF ALDERMEN

PROPOSED AMENDMENT TO THE
GRAIN VALLEY MARKETPLACE
TAX INCREMENT FINANCING PLAN

BOARD OF ALDERMEN MEETING DATE: DECEMBER 9, 2013

INTRODUCTION

Background.

On August 30, 2010, the Tax Increment Financing Commission of Grain Valley, Missouri (the "Commission") voted in favor of recommending to the Board of Aldermen of the City of Grain Valley ("Board of Aldermen") that it should approve the Grain Valley Marketplace Tax Increment Financing Redevelopment Plan (the "Original Plan"). The Commission further recommended that the Board of Aldermen determine that the Redevelopment Area is a Blighted Area and that it met all other applicable requirements under Missouri's Real Property Tax Increment Allocation Redevelopment Act, Sections 99.800 to 99.865, RSMo 2010, as amended (the "TIF Act").

The Original Plan provided for the construction of four redevelopment projects to remediate blight in the vicinity of the I-70/Buckner Tarsney Road interchange in Grain Valley. The Original Plan was initiated, in part, as a funding mechanism to aid the City of Grain Valley to secure the local funding match required to receive up to $11.71 million from the Missouri Department of Transportation for an interchange reconstruction project.

S.G. Property Management, LLC, a private developer, acquired the property located at the northeast quadrant of the Redevelopment Area, which is known as Project Area 2. Project 2 included the construction of a commercial development comprised of retail, restaurants and entertainment; public improvements servicing the development; the portion of Public Road Improvements attributable to Redevelopment Project Area 2; and other additional necessary and beneficial public improvements outside the Redevelopment Project Areas, which are necessary and beneficial to the Redevelopment Plan. Project 2 is not being changed in any way as a result of this proposed amendment.

Redevelopment Projects 1, 3, and 4 included Public Road Improvements to be undertaken by the City as the presumed developer of these "speculative" portions of the overall development. At the public hearing on the Original Plan, the City's staff and consultants indicated the City's intent to refrain from introducing ordinances to approve Projects 1, 3, and 4 into the governing body within 14-90 days after the close of the TIF Commission hearing. This purposeful omission made it necessary for future activation or modifications to Projects 1, 3, or 4 to be brought before the TIF Commission for additional consideration before activation of tax increment financing for these projects could commence. In the Original Plan the total gross project costs for Projects 1, 3, and 4 were estimated to be approximately $4,608,681, all of which was paid by the City using a combination of G.O. bond proceeds and available utility cash, and which amount was expected to be reimbursed to the City on a pay-as-you-go basis.

By Ordinance No. 2107, adopted by the Board of Aldermen on September 27, 2010 ("Original Plan Ordinance"), the City approved the Original Plan, determined that the Redevelopment Area

is a Blighted Area and that it met the other applicable requirements of the TIF Act. By that ordinance the Board of Aldermen also selected S.G. Property Management, LLC, as the Developer to implement Project 2 of the Plan. At the time the Original Plan Ordinance was adopted, the City was indicated as the developer of Projects 1, 3, and 4, as the City initiated and intended to fund the costs of the public improvements which benefitted those Redevelopment Project Areas. However, as was described above, tax increment financing was not activated for Projects 1, 3, or 4, nor was a developer designated for these Projects, because at that time it was unknown whether redevelopment of these areas would require any additional incentives to resolve barriers of entry to an interested developer.

Some retail development has been attracted to a portion of Project Area 1 as a result of the blight remediation and public infrastructure improvements that had long been a detriment to the proper development of these areas in the past. At this time, developers of these new retail developments have not requested additional incentives beyond the public improvements undertaken by the City. Because development in Project Area 1 has been limited to a small portion of that Project, the City has proposed splitting that Project Area into two project areas: Project 1A and Project 1B. In order to maximize TIF capture to allow for the most expedient retirement of TIF Bonds and other Reimbursable Project Costs, the City has initiated the process for activation of tax increment financing for Project Area 1A, and is concurrently seeking an amendment to Projects 1, 3, and 4 to address changes in the Project Area 1 boundaries and the facts associated with those projects in the three years since the Original Plan was approved.

Additionally, in the time since the Original Plan was approved, the public improvements for each of the four Project Areas have nearly been completed and estimated costs largely are now known, actual costs, which have increased by approximately $4.73 million. Due to a combination of factors including additional revenue producing land, higher revenues from actual retailers, efficient financing, decreased assessed values, increased property tax rates, unanticipated tax revenues, and additional grant funds from MoDOT, the amended reimbursable project costs for Projects 1A, 1B, 3, and 4 have increased only $2.76 million to a total of $7,365,287.

Summary of Proposed Amendments to Project.

The proposed Amendment to the Grain Valley Marketplace Tax Increment Financing Plan ("Amended Plan") leaves the Original Plan intact and operating as the base plan for redevelopment of the four original Redevelopment Areas in the aggregate. The Amended Plan is intended to supplement and supersede the Original Plan only to the extent that the Amended Plan differs from the Original Plan. Additionally, the Amended Plan does not in any way modify or change Redevelopment Project 2. To serve the goal of efficient presentation of information we thought it best to illustrate the proposed changes in tabular form as follows:

	Original Plan **specific only to Projects 1, 3, & 4)**	**Proposed Amendment to Projects 1, 3, & 4**
General Plan Information		
Name of Development	Grain Valley Marketplace	Grain Valley Interchange
Developer	City of Grain Valley	Unchanged
Redevelopment Area	18.6 acres	Unchanged

Gross Total Project Cost	$18,192,000	$22,921,826
Private Developer's Portion	$0 (0%)	Unchanged
Public Financing Portion	$4,608,681 (100%)	$7,365,287
Number of Redevelopment Projects	3 (excludes Project 2)	4 (Project 1 is divided into Project 1A and Project 1B)
Projected Completion Date	2014	2016
Proposed Financing Amendments		
Initial Financing Method	TIF Revenue Bonds	City G.O. Bonds
Project 1A Reimbursable Project Costs	$2,493,504	$493,823
Project 1B Reimbursable Project Costs	(component of above)	$3,352,460
Project 3 Reimbursable Project Costs	$454,735	$1,012,519
Project 4 Reimbursable Project Costs	$1,660,440	$2,506,484
Proposed Project Amendments		
Project 1 Details	• Construction of pharmacy, convenience store, two fast food restaurants, and necessary public infrastructure • Initial design, interchange improvements, 40 Highway relocation, Southeast outer road realignment, Main Street south and Main Street downtown improvements	• Project Divided into Project 1A and Project 1B • Project 1A consists of an auto parts retailer and a fast food restaurant • Project 1B consists of all of the components that made up Project 1 in the Original Plan (pharmacy, c-store, two fast food restaurants, and necessary public infrastructure • Major public road improvements remain the same
Project 3 Details	• Construction of 18,000 ft^2 of retail stores, a convenience store, two fast food restaurants, a 60-unit multi-family dwelling and necessary	• Unchanged

	public infrastructure • Initial design, north outer road traffic signal, and interchange improvements	
Project 4 Details	• Construction of 6,500 ft^2 of retail stores, a full service restaurant, a fast food restaurant, and necessary public infrastructure • Initial design, interchange improvements, 40 Highway relocation, Southeast outer road realignment, Main Street south and Main Street downtown improvements	• Unchanged

Financing Summary.

As described in detail in the Blight Study, which is Exhibit 7 of the Original Plan and is unchanged by the proposed Amended Plan, the Buckner-Tarsney Road and Interstate 70 intersection has been recognized for years as being inadequate for existing traffic demand, which creates unsafe conditions, restricts regional traffic flow, and limits economic development. The City, in conjunction with the Missouri Department of Transportation ("MoDOT"), has identified transportation infrastructure improvements necessary to serve the Buckner-Tarsney Road and Interstate 70 area. At the time the Original Plan was approved the total cost of these improvements was estimated to be $18,192,000.

As of the time of this amendment, the total cost of the Public Road Improvements has increased to $22,921,826. A significant portion of this total ($13,505,512) will be financed by MoDOT through the cost share agreements provided as Exhibits 7B and 7C of the Original Plan and 7D of the Amended Plan. The City of Grain Valley sought and was awarded more than a half-million of additional funds through a Missouri Transportation Enhancement Funds grant ($443,117) also from an award of Missouri STP Funds Planning Sustainable Places grant ($120,000). These grants are of Federal funds administered locally by the Mid-America Regional Council. The remaining balance must be covered by a local match, for which the Projects 1A, 1B, 3, and 4 portions is $7,365,287.

The Original Plan was adopted as a mechanism that allowed the City to make the necessary improvements to the interchange. Project 2, which will not be affected by the proposed Amended TIF Plan, is being developed by a developer selected by the City when the Original Plan was approved. Private developers of Project 1A did not request any incentives from the City beyond the road improvements undertaken by the City and MoDOT. Project 1A was developed into a fast food restaurant and an auto parts retail store. The City is continues to seek developers for Project 1B in the southwest corner; Project 3 in the northwest corner, and Project 4 in the southeast corner. As developers for Projects 1B, 3 and 4 have not yet been identified, the specific type and number of uses to be constructed in these areas is undetermined. Based on a retail marketability analysis prepared for the City by Eric Lander of Canyon Research Southwest in March of 2006, and upon discussions with potential developers within these Project

areas, it is currently estimated that Projects 1B, 3 and 4 will include a pharmacy, two convenience stores, five fast food restaurants, one full-service restaurant, and 24,500 square feet of retail space. Due to the final layout of the Public Road Improvements, additional developable area equal to the amount of square footage developed in Project 1A was identified. Consequently, it appears that the remaining Projects 1B, 3, and 4 can still support the development identified in the earlier market analyses. These expected businesses are also consistent with a "Retail Gap Analysis" that was a part of the Grain Valley Economic Development Plan that was adopted by the Mayor and Board of Aldermen in September 2007. While the City has identified the possible uses that could be located in Projects 1A, 1B, 3, and 4, the only project costs that were established in the Original Plan for these prospective portions of the TIF are $4,610,000 of the transportation infrastructure improvements described above. Now that the road improvements are nearly complete, this amount has increased to $7,365,287. The City anticipates requiring any developers for these areas who seek additional incentives to form a community improvement district to reduce the burden on other taxing jurisdictions through an additional district sales tax.

As was contemplated in the Original Plan, there was and remains the possibility that due the City's completion of the interchange improvements, redevelopment of Project Areas 1B, 3, and 4 would not require additional incentives by developers interested in undertaking projects in these areas. This is in fact the case for the portion of Project Area 1 that triggered the need for the TIF Commission's hearing. However, since the development occurring in Project Area 1 is limited to a small portion of that project area, the City is proposing to split that area into two projects: Project 1A and Project 1B. Doing so would maximize TIF revenue capture for the entire Project 1 area as originally proposed, with retail and other commercial development occurring throughout the project area, not only in a small portion located adjacent to Main Street.

Summary of Benefit to the Taxing Jurisdictions.

Tax increment financing is generally based on the concept that redevelopment of a disadvantaged area will result in an incremental increase in tax revenues. All or a portion of these incremental increases in revenue are captured for the period of time necessary to pay for the incentives required for the redevelopment to occur, which time cannot exceed 23 years from when capture of the incremental increase commenced. The incremental increases in property tax revenues are distributed as "payments in lieu of taxes" which are commonly referred to as "PILOTs." The incremental increases in economic activity taxes (the most common type is sales tax), which are commonly referred as "EATs." The annual PILOTs and EATs captured by the TIF District are the amount above tax collections within the redevelopment area in the year before tax increment financing is activated. This prior year tax level is considered the "base."

If the proposed Amended Plan is approved, base-year ad valorem property tax revenues and sales tax revenues will continue to pass through to the taxing jurisdictions. The affected taxing jurisdictions include, but are not limited to, the City of Grain Valley, Jackson County, the Grain Valley R5 School District, the Central Jackson County Fire Protection District, and the Mid-Continent Public Library. A full list of affected taxing jurisdictions is presented in the Cost Benefit Analysis provided at Exhibit 9B of the Amended TIF Plan.

The Amended Plan indicates that according to the Jackson County Assessor's Office, the initial total equalized assessed value of the real estate within the redevelopment project areas 1A, 1B, 3,

and 4 is $621,775 for the 2013 tax year. It is estimated that the total equalized assessed value of the real estate within the Redevelopment Area will be approximately $4,261,736 by 2037. It is also estimated that sales generated within Redevelopment Project Areas 1A, 1B, 3, and 4 will increase from $2,403,043 to $21,017,373 during the last year that the Amended Plan is in effect. Exhibit 8B of the Amended Plan indicates the total Payments in Lieu of Taxes and Economic Activity Taxes generated by Redevelopment Projects 1A, 1B, 3, and 4 during the anticipated twenty-four (24)[1] year duration of the Amended Plan are estimated to be $7,919,359 and $10,995,306 respectively, for a total of $18,914,665. Upon completion of the TIF Plan, and the payment of all Reimbursable Project Costs, tax revenue from the proposed Redevelopment Area will be paid to all taxing jurisdictions within such area.

At Exhibit 11B the City has provided the statutorily required Cost-Benefit Analysis which shows the impact on the affected taxing jurisdictions if the proposed redevelopment project is not built and if it is built. The first page of Exhibit 11B compares the total revenues expected by all taxing jurisdictions, cumulatively, if the project is not built and if the proposed project is built. This table estimates that, in aggregate, the local taxing jurisdictions would see an increase of approximately $14.9 million in revenues over the next 24-year period if the project is built.

REVIEW PROCESS OF THE PROPOSED TIF PLAN AMENDMENT

The process for amending a TIF Plan after it has been approved by ordinance is established by Section 99.825.1, RSMo. That section requires proposed changes that 1) alter the exterior boundaries of a redevelopment plan area or redevelopment project area; 2) affect the general land uses set forth in the original plan; or 3) change the nature of a redevelopment project to be presented to the TIF Commission for approval in the same manner as was the original plan. As new development was beginning to occur in a portion of Project Area 1 due to the completed public improvements, it became necessary to activate tax increment financing for that area to capture the resulting TIF revenues as set forth in the Redevelopment Plan. As anticipated when the Original Plan was adopted, this required a hearing before the TIF Commission because the ordinance to activate tax increment financing was purposely not introduced in the governing body within the required 14-90 days after the close of the Commission's hearing on the Original Plan. Since a hearing was required, City staff and consultants have proposed amending the original plan to address the actual costs of construction of the public improvements and to split Project Area 1 into Project Areas 1A and 1B to maximize the capture of TIF revenues.

In anticipation of the proposed Amended Plan, the City, on behalf of the TIF Commission, mailed the statutorily required 45 day notice of the TIF Commission public hearing to the affected taxing jurisdictions. Statutorily required notices were published in *The Examiner* newspaper and were sent via certified U.S. mail to the affected property owners. The TIF Commission met at 7:00 p.m. at Grain Valley City Hall on November 14, 2013, where it held a public hearing for the proposed Plan Amendment. The City's staff and consultants filed the Amended Plan with the City on October 31, 2013. The City's staff and consultants have ensured that the proposed plan, as revised, and is consistent with the TIF Act and applicable City policies and requirements.

[1] The TIF district will be active for a total 24 years due to phasing of the individual redevelopment projects. However, for each individual redevelopment project, TIF will only be active for 23 years in accordance with the TIF Act. Note that Project 1A will be activated sooner than Projects 1B, 3, and 4.

As part of City staff's due diligence in reviewing the application for the proposed Amended Plan, the City engaged Lauber Municipal Law, LLC, the City's special economic development counsel, to advise the City regarding the substantive and procedure issues related to the TIF Plan amendment and approval process.

The Developer of Project Area 2 had previously hired Urban Planner Andrew Z. Murray, AICP, of Husch Blackwell Sanders LLP, to prepare the blight study of the proposed Redevelopment Area. This blight study is attached as Exhibit 6 of the Original Plan and has not changed since the adoption of the Original Plan. The blighted conditions in the Redevelopment Area have not been remediated completely at this time, and all remediation that has taken place was done through the implementation of the Original Plan.

In order for the Amended Plan to be adopted, state statutes require that the Board of Aldermen make the following six findings:

1. The redevelopment area on the whole is a blighted area, a conservation area, or an economic development area, and has not been subject to growth and development through investment by private enterprise and would not reasonably be anticipated to be developed without the adoption of tax increment financing. Such a finding shall include, but not be limited to, a detailed description of the factors that qualify the redevelopment area or project pursuant to this subdivision and an affidavit, signed by the developer or developers and submitted with the redevelopment plan, attesting that the provisions of this subdivision have been met;
2. The redevelopment plan conforms to the comprehensive plan for the development of the municipality as a whole;
3. The estimated dates, which shall not be more than twenty-three years from the adoption of the ordinance approving a redevelopment project within a redevelopment area, of completion of any redevelopment project and retirement of obligations incurred to finance redevelopment project costs have been stated, provided that no ordinance approving a redevelopment project shall be adopted later than ten years from the adoption of the ordinance approving the redevelopment plan under which such project is authorized and provided that no property for a redevelopment project shall be acquired by eminent domain later than five years from the adoption of the ordinance approving such redevelopment project;
4. A plan has been developed for relocation assistance for businesses and residences;
5. A cost-benefit analysis showing the economic impact of the plan on each taxing district which is at least partially within the boundaries of the redevelopment area. The analysis shall show the impact on the economy if the project is not built, and is built pursuant to the redevelopment plan under consideration. The cost-benefit analysis shall include a fiscal impact study on every affected political subdivision, and sufficient information from the developer for the commission established in section 99.820 to evaluate whether the project as proposed is financially feasible;
6. A finding that the TIF Plan does not include the initial development or development of any gambling establishment.

The TIF Act requires the TIF Commission to vote on the proposed Amended Plan within thirty (30) days following completion of the hearing, and the TIF Commission must also make recommendations to the governing body within ninety (90) days of the close of the public

hearing concerning the adoption of Amended Plan and the related redevelopment projects therein. The TIF Commission closed the public hearing on November 14, and based on the following information, unanimously recommended by virtue of Resolution 2013-01 that the Board of Aldermen should:

1. Re-affirm the findings previously made by the Board pursuant to Section 99.810, RSMo, when it approved the Original Plan;
2. Approve the Amended Plan by ordinance; and
3. Adopt ordinances at the appropriate time to initiate tax increment financing in each Redevelopment Project Area within the Redevelopment Area.

ANALYSIS OF REQUIRED STATUTORY FINDINGS

FINDING # 1 - ***A finding must be made that the development area on the whole is a blighted area, a conservation area, or an economic development area, and has not been subject to growth and development through investment by private enterprise, and would not reasonably be anticipated to be developed without the adoption of tax increment financing.***

Blight Designation

Blighted conditions still exist in the Redevelopment area and the remediation called for in the Original Plan has not yet been completed. To the extent that blighted conditions have been remediated at this point, such activity was the result of implementation of the Original Plan.

"But For" Test

The "but for" test requires that a finding be made that the proposed redevelopment area has not been subject to growth and development through investment by private enterprise and would not reasonably be anticipated to be developed without the adoption of tax increment financing; i.e., "but for" the use of TIF, the area is not anticipated to be developed.

As required by the TIF statute, Exhibit 12B of the Amended Plan includes the affidavit of Alexa Barton, City Administrator of the City of Grain Valley, Missouri (the Developer for purposes of the public improvements in Projects 1A, 1B, 3, and 4), attesting that the statutory requirements for blight for the area on the whole and the "but for" test have been met; i.e., that the area has not been subject to growth and redevelopment through investment by private enterprise, and without TIF assistance, the projects contemplated by the Amended Plan would not be reasonably expected to occur, and that the project would not be economically viable for any developer without such assistance.

Additionally, as detailed in the Updated But-For Determination Report prepared by Springsted, Inc., the substandard and dangerous road conditions in existence prior to the adoption of the Original Plan in 2010 had effectively prohibited any economic growth in the full Redevelopment Area. This is because the costs of undertaking the necessary road improvements to allow new development to occur far exceed the benefit of making the improvements as measured by increased property value. Because it would cost developers an aggregate $7.37 million to undertake the improvements and the developers would only realize an aggregate $640,000 increase in value, it is clear that the redevelopment of Project Areas 1A, 1B, 3, and 4 would not

have occurred but for the TIF incentives provided for in the Original Plan and this Amended Plan.

Recommendation: The TIF Commission recommended that Board of Aldermen should adopt an ordinance to re-affirm the findings it previously made, specifically: 1) that the Redevelopment Area is a "Blighted Area" as described by state statutes and 2) find that the proposed redevelopment area has not been subject to growth and development through investment by private enterprise, and would not reasonably be anticipated to be developed without the adoption of tax increment financing and that information sufficient to support a conclusion to that effect has submitted in Amended Plan.

FINDING # 2 - ***A finding must be made that the proposed TIF Plan conforms to the comprehensive plan for the development of the City as a whole***.

The City's comprehensive plan is titled the Grain Valley, Missouri Comprehensive Plan and was last adopted by the Mayor and Board of Aldermen in April 2010. Where applicable, the Comprehensive Plan is supplemented by area plans that are incorporated as a part of the comprehensive plan, and provide additional detail about specific areas. The proposed redevelopment project area lies within the area addressed in the City of Grain Valley's Main Street Corridor and Adjacent Neighborhoods Plan, which was adopted in July 2006.

At the time the Original Plan was approved, City staff analyzed that plan in light of the City's comprehensive plan and determined that the Original Plan was in conformance therewith. The City's Comprehensive Plan has not been amended since the adoption of the Original Plan. The Amended Plan does not change the proposed uses for Project 1, 3, and 4, and therefore the Amended Plan is also in conformance with the City's Comprehensive Plan and related documents.

Recommendation: The TIF Commission recommended to the Board of Aldermen that it should find that the proposed Amended Plan is in conformance with the City's Comprehensive Plan.

FINDING # 3 - ***A finding must be made that the estimated dates for the completion of projects and retirement of obligations incurred to finance the development do not exceed twenty-three years from the time a redevelopment project is authorized, that no redevelopment project is scheduled to be authorized within ten years after of the adoption of the TIF Plan, and that no property will be secured by eminent domain later than five years from the adoption of the ordinance approving the development project.***

The City proposes to divide Project 1 into Projects 1A and 1B. Project 1A is in the process of being developed into two retail businesses, a McDonald's restaurant and an Advance Auto Parts store. These businesses did not require incentives in addition to the public improvements undertaken by the City through the implementation of the Original Plan. The City is requesting the authorization and activation of tax increment financing for Project 1A concurrent with the approval of the proposed Amended Plan in December 2013. The public improvements for Project 1A are estimated to be complete by December 31, 2013. TIF Revenue bonds were not issued to pay for the public improvements in Project 1A, as the City paid those costs from other

funds. While it is not anticipated that any obligations will be issued to finance the costs of development of Project 1A, the Amended TIF Plan specifically requires any obligations to be retired in less than 23 years after the expected authorization of Project 1A. The acquisition of property for Project 1A has been completed and did not require eminent domain. Thus eminent domain will not be used to acquire property later than five years after the approval of Project 1A.

The City is seeking a developer for the private improvements related to Project 1B who, as indicated in Exhibit 8B of the Amended Plan, may commence construction of retail/commercial portion of this project at any time and would be expected to complete construction by October 2015. Additionally, the highway projects, which comprise the known estimated project costs of Project 1B, are expected to be completed by December 31, 2013. Therefore, the adoption of an ordinance approving Project 1B will not be later than 10 years after the adoption of an ordinance approving the Original Plan. TIF Revenue bonds were not issued to pay for the public improvements in Project 1B, as the City paid those costs from other funds. While it is not anticipated that any obligations will be issued to finance the costs of development of Project 1B, the Amended TIF Plan specifically requires any obligations to be retired in less than 23 years after the expected authorization of Project 1B. It is not anticipated that any property within Project 1B will be acquired by eminent domain, but nevertheless the Original Plan and the Amended Plan specifically prohibit the acquisition of property by eminent domain later than five years from the adoption of an ordinance approving Project 1B, in accordance with the TIF Act.

The City is seeking a developer for the private improvements related to Project 3 who, as indicated in Exhibit 8B of the Amended Plan, may commence construction of retail/commercial portion of this project at any time and would be expected to complete construction by March 2016. Additionally, the highway projects, which comprise the known estimated project costs of Project 3, are expected to be completed by December 31, 2013. Therefore, the adoption of an ordinance approving Project 3 will not be later than 10 years after the adoption of an ordinance approving the Original Plan. TIF Revenue bonds were not issued to pay for the public improvements in Project 3, as the City paid those costs from other funds. While it is not anticipated that any obligations will be issued to finance the costs of development of Project 3, the Amended TIF Plan specifically requires any obligations to be retired in less than 23 years after the expected authorization of Project 3. It is not anticipated that any property within Project 3 will be acquired by eminent domain, but nevertheless the Original Plan and Amended Plan specifically prohibit the acquisition of property by eminent domain later than five years from the adoption of an ordinance approving Project 3, in accordance with the TIF Act.

The City is seeking a developer for the private improvements related to Project 4 who, as indicated in Exhibit 8B of the Amended Plan, may commence construction of retail/commercial portion of this project at any time and would be expected to complete construction by December 2015. Additionally, the highway projects, which comprise the known estimated project costs of Project 4, are expected to be completed by December 31, 2013. Therefore, the adoption of an ordinance approving Project 4 will not be later than 10 years after the adoption of an ordinance approving the Original Plan. TIF Revenue bonds were not issued to pay for the public improvements in Project 4, as the City paid those costs from other funds. While it is not anticipated that any obligations will be issued to finance the costs of development of Project 4, the Amended TIF Plan specifically requires any obligations to be retired in less than 23 years after the expected authorization of Project 4. It is not anticipated that any property within Project 4 will be acquired by eminent domain, but nevertheless the Original Plan and Amended Plan

specifically prohibit the acquisition of property by eminent domain later than five years from the adoption of an ordinance approving Project 4, in accordance with the TIF Act.

Recommendation: The TIF Commission recommended to the Board of Aldermen that it should find that the Amended Plan contains information that dates for completion of projects and retirement of obligations incurred to finance the development are not more than twenty-three years from the adoption of the ordinance approving a development project within the development area, that no project is scheduled or permitted to begin more than ten years after the adoption of the ordinance authorizing the Original Plan, and that no property will be secured by eminent domain later than five years from the adoption of the ordinance approving any of the development projects.

FINDING # 4 - ***A finding must be made that a plan has been developed for relocation assistance for businesses and residences.***

Exhibit 13 of the Original Plan included a relocation plan for businesses and residences within the redevelopment area, which satisfies the requirement for this finding. If relocations become necessary, relocation assistance will be provided in accordance with the plan included as Exhibit 13 to the Original Plan, which has been carried over to the Amended Plan, and as otherwise required by the TIF Act. The relocation policy complies with State statutes and the City's policy for relocation assistance.

Recommendation: The TIF Commission recommended that the Board of Aldermen should reaffirm its finding a plan to provide relocation assistance for businesses and residences affected by the Amended Plan has been developed and approved.

FINDING # 5 - ***A finding must be made that a cost-benefit analysis has been prepared showing the economic impact of the TIF Plan on each taxing district which is at least partially within the boundaries of the development area, that the analysis shows the impact on the economy if the project is not built, as well as if it is built pursuant to the development plan under consideration, that the cost-benefit analysis includes a fiscal impact study on every affected political subdivision, and that there is sufficient information from the developer for the commission to evaluate whether the project as proposed is financially feasible.***

Tax impact analyses have been submitted as Exhibit 9B of the Amended Plan and cost-benefit analyses has been submitted as Exhibit 10B of the TIF Plan to show the economic impact of the TIF Plan on each taxing jurisdiction and political subdivision that is at least partially within the boundaries of the proposed development area for Projects 1A, 1B, 3, & 4. As indicated above, Springsted Incorporated performed an independent "but for" test for Projects 1A, 1B, 3, and 4 in the form of a comparison of Reimbursable Project Costs to increase in land value attributable to construction of the transportation infrastructure improvements. As required by state statute, the analysis provided in Exhibit 11B includes the impact on the economy if Projects 1A, 1B, 3, and 4 are not built, or are built in accordance with the TIF Plan under consideration. Together, Exhibits 8B, 9B, 10B, and 11B provide sufficient information to evaluate whether Projects 1A,

1B, 3, and 4 are financially feasible. Taken together with Exhibits 7B and 7C from the Original Plan, Exhibit 7D of the Amended Plan is one in a series of contracts between the City and MoDOT whereby the City and MoDOT have committed to provide funding for the cost of the necessary transportation infrastructure improvements in and around the TIF Plan area, which are the only reimbursable redevelopment project costs for Redevelopment Project Areas 1A, 1B, 3, and 4.

Recommendation: The TIF Commission recommended that the Board of Aldermen find that a cost-benefit analysis has been prepared showing the economic impact of the Amended Plan on each taxing district which is at least partially within the boundaries of the development area; that the analysis shows the impact on the economy if the project is not built, as well as if it is built pursuant to the development plan under the Amended Plan; that the cost-benefit analysis includes a fiscal impact study on every affected political subdivision; and that there is sufficient information to evaluate whether the project as proposed is financially feasible.

FINDING # 6 - ***A finding must be made that the TIF Plan does not include the initial development or development of any gambling establishment.***

A review of the Amended TIF Plan indicates that the initial development or development of any gambling establishment is **not** included.

Recommendation: The TIF Commission recommended that the Board of Aldermen find that the Amended Plan does not include the initial development or development of any gambling establishment.

CONCLUSION

The City staff and consultant's approach in reviewing requests for TIF assistance overall has been to determine the amount of public benefit the Amended Plan will generate. Approval and implementation of the Amended Plan and its proposed redevelopment projects will benefit the public by remediating long-standing blighted conditions in the proposed redevelopment area by replacing deteriorating site improvements and removing unsanitary conditions, which together have resulted in an economic or social liability and/or menace to the public health in this area. The demolition of vacant and under-tenanted structures, construction of new roads, curbs, and parking areas and the installation of new security and other parking lighting throughout the area, will improve infrastructure that is currently creates unsafe conditions, impedes traffic flow, and discourages relocation by new, modern businesses and therefore limiting economic development in this area. Additionally, the proposed Amended Plan will provide additional restaurant, retail and commercial development, which will improve the quality of life for consumers in the City of Grain Valley, most of whom are constituents of each of the affected taxing jurisdictions, for years to come.

In conducting a thorough review of the proposed Amended Plan and its component redevelopment project, along with the assistance of its financial and legal consultants, it is City staff's conclusion that the Amended TIF Plan generally provides sufficient information to

demonstrate that the statutorily required six findings have been met and that the TIF Commission was provided information that provided it with a sufficient basis to recommend to the Board of Aldermen that the proposed Amended Plan and associated redevelopment projects may be approved. The TIF Commission unanimously recommended by virtue of Resolution 2013-01 that the Board of Aldermen should:

1. Re-affirm the findings previously made by the Board pursuant to Section 99.810, RSMo, when it approved the Original Plan;
2. Approve the Amended Plan by ordinance; and
3. Adopt ordinances at the appropriate time to initiate tax increment financing in each Redevelopment Project Area within the Redevelopment Area.

The City's staff and consultants concur with the TIF Commission's recommendations and also recommend that the Board of Aldermen take the actions set forth in the TIF Commission's resolution.

Additionally, due to the development of Project 1A, the City's staff and consultants recommend that the Board of Aldermen adopt an ordinance activating tax increment financing for that project area to maximize the capture of EATs revenue from that project.

INTENTIONALLY LEFT BLANK

Resolutions

INTENTIONALLY LEFT BLANK

CITY OF GRAIN VALLEY BOARD OF ALDERMEN AGENDA ITEM		
MEETING DATE	04/27/2020	
BILL NUMBER	R20-24	
AGENDA TITLE	**A RESOLUTION BY THE BOARD OF ALDERMEN OF THE CITY OF GRAIN VALLEY, MISSOURI AUTHORIZING THE CITY ADMINISTRATOR TO PURCHASE EQUIPMENT AND MATERIALS FOR THE INSTALLATION OF A FIXED BASE METER READING SYSTEM AND COMPUTER SOFTWARE**	
REQUESTING DEPARTMENT	Community Development	
PRESENTER	Mark Trosen – Director Community Development	
FISCAL INFORMATION	Cost as recommended:	$65,000.00
	Budget Line Item:	600-60-78500 600-60-78520 600-60-78530 600-65-78520 600-60-78530
	Balance Available:	$65,000.00 $550.00 $10,335.00 $550.00 10,335.00
	New Appropriation Required:	[ ] Yes [X] No
PURPOSE	To read water meters routinely with no interruptions for utility billing purposes and to provide the best possible customer service.	

BACKGROUND	The City currently drives the routes in town to collect the meter reads or physically reads the meters on site. The new system will be installed on current infrastructure and or sites to collect reads when needed for Utility Billing and customers.
SPECIAL NOTES	N/A
ANALYSIS	N/A
PUBLIC INFORMATION PROCESS	N/A
BOARD OR COMMISSION RECOMMENDATION	N/A
DEPARTMENT RECOMMENDATION	Staff Recommends Approval
REFERENCE DOCUMENTS ATTACHED	Resolution, Prop. study, Neptune equipment quote, memo

CITY OF GRAIN VALLEY **STATE OF MISSOURI**

April 27, 2020

RESOLUTION NUMBER
R20-24

A RESOLUTION BY THE BOARD OF ALDERMEN OF THE CITY OF GRAIN VALLEY, MISSOURI AUTHORIZING THE CITY ADMINISTRATOR TO PURCHASE EQUIPMENT, MATERIALS, AND SOFTWARE FOR THE INSTALLATION OF A FIXED BASE METER READING SYSTEM

WHEREAS, the Board of Aldermen adopted Resolution 06-28 establishing purchasing procedures for the City of Grain Valley, Missouri; and

WHEREAS, the Board of Aldermen adopted Ordinance 2485 establishing the budget for Fiscal Year 2020 on December 9th, 2019, appropriating funds for the Neptune fixed base meter reading system; and

WHEREAS, the recommendation is in accordance with the adopted purchasing policy and the approved budget for water meter reading equipment; and

WHEREAS, upon execution of this agreement the City of Grain Valley will receive the services, equipment, software provided in the agreement with Neptune Technology.

NOW THEREFORE, BE IT RESOLVED by the Board of Aldermen of the City of Grain Valley, Missouri as follows:

SECTION 1: The City Administrator is authorized to enter into an agreement with Neptune Technology to provide software support and equipment for water meter reading purposes.

PASSED and APPROVED, via voice vote, (-) this __ Day of _____, 2020.

_____
Mike Todd
Mayor

ATTEST:

_____
Jamie Logan
City Clerk

INTENTIONALLY LEFT BLANK

R900 Propagation Analysis
City of Grain Valley, MO
02/14/2020



Predicted Coverage Results:

Map	Description	Provided Services		5,616	Geocoded Services	5,426	Area (sq Miles)	5.50	sq Mi /Coll
		#Coll	MIU Type	Read Type	Pass	%Pass	Pass	%Pass	
1	>90%	3	R900v4 Pit	Daily	4,911	90.50%	5.01	91.09%	1.7
2	>99%	5	R900v4 Pit	Daily	5,385	99.24%	5.41	98.21%	1.1

Confidential Information

Map 1: >90% predicted

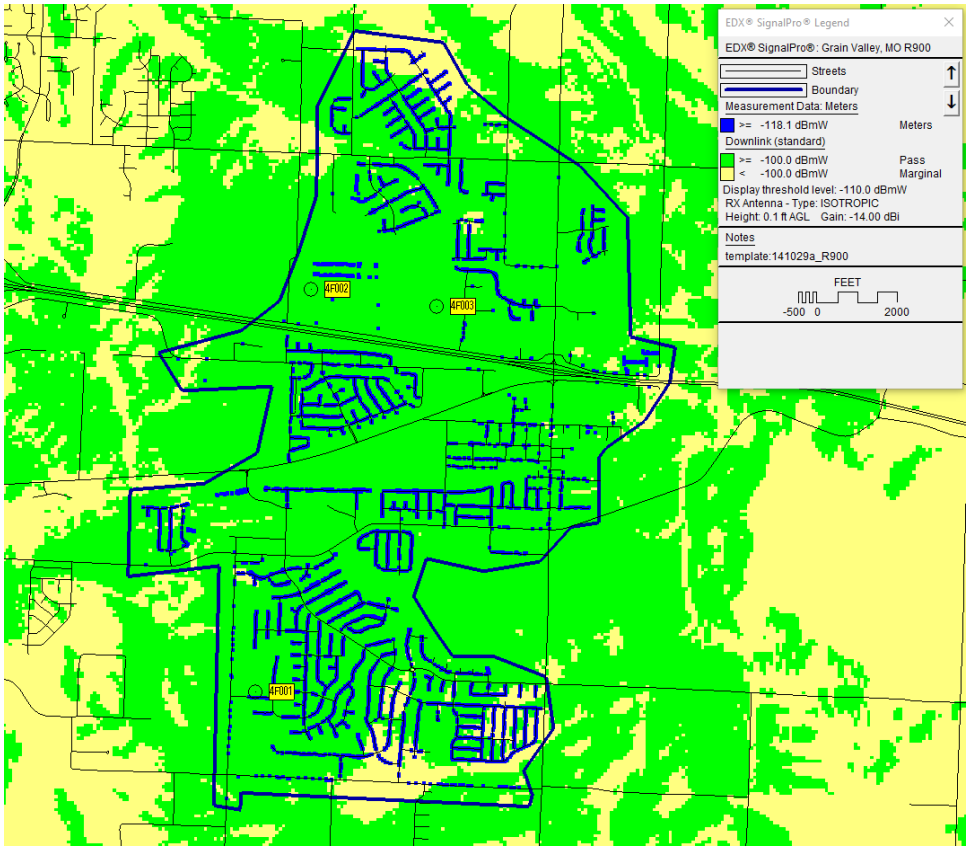

Confidential Information

Map 2: >99% predicted

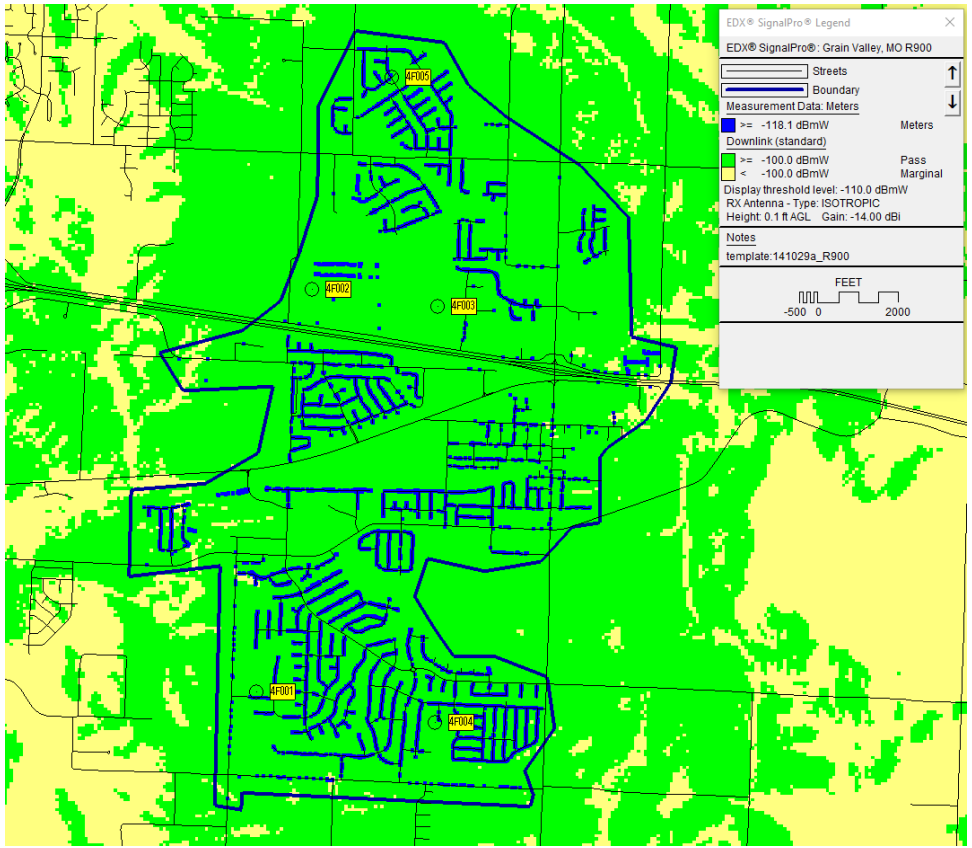

Confidential Information

Elevation Map *(National Elevation Dataset available, courtesy of the U.S. Geological Survey)*

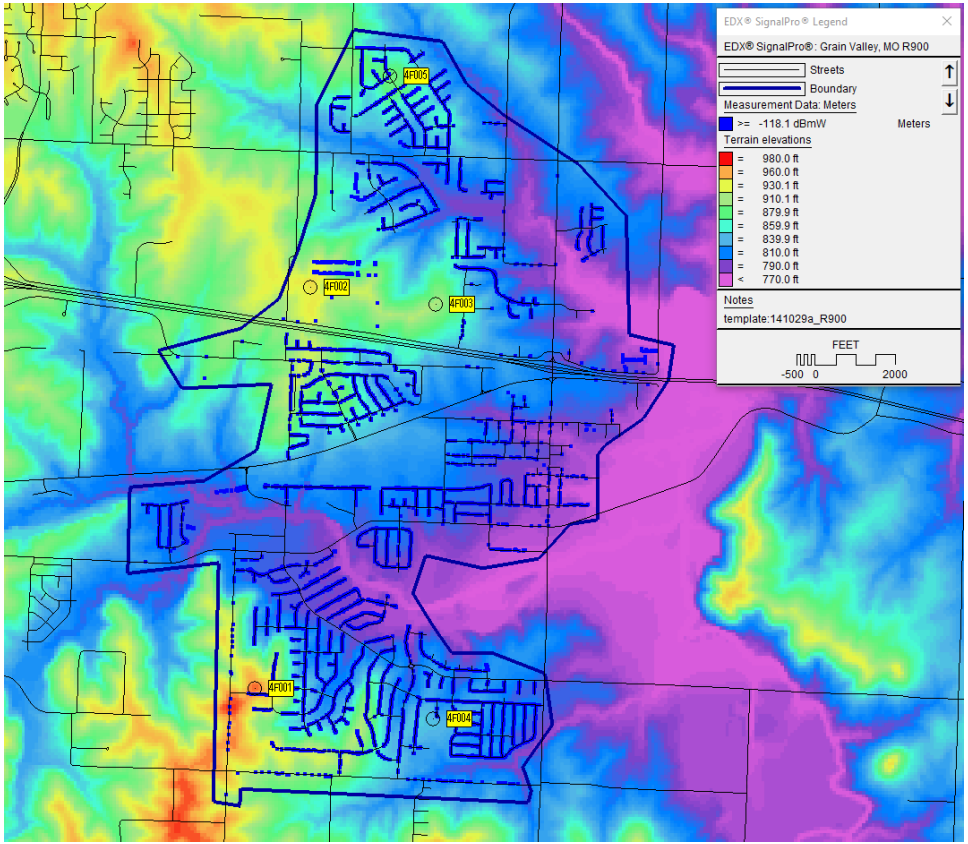

Confidential Information

Gateway Locations:

Map	Location	Latitude	Longitude	Collector	Elev(m)	AntHgt(m)	Elev(ft)	AntHgt(ft)	Coax(dB)	AntGain	Antenna
1,2	4F001	38.999096	-94.224444	GPV4	296	23	971	75	1.6	7.1	MFB9155_915
1,2	4F002	39.026957	-94.219509	GPV4	286	23	938	75	1.6	7.1	MFB9155_915
1,2	4F003	39.025776	-94.208348	GPV4	279	23	914	75	1.6	7.1	MFB9155_915
2	4F004	38.996983	-94.208584	GPV4	256	23	840	75	1.6	7.1	MFB9155_915
2	4F005	39.041634	-94.212416	GPV4	271	23	890	75	1.6	7.1	MFB9155_915

Confidential Information

Conditions:

- Spare gateway recommended for system maintenance.
- Revised propagation analysis required for Gateway location or height changes.
- FAA/ASR may be required for structures near airports or heights >200ft.
- AM Tower detuning evaluations for structures within 3km, check with LBA Group or Sitesafe.
- 10ft minimum vertical separation from other 900MHz system antennas on structure. Antenna requires 3ft-4ft standoff for side mounting on towers.
- Complies with FCC/IC Rules: May not cause harmful interference, and must accept any interference received, including interference that may cause undesired operation.
- MIUs mounted inside structures are not recommended for Fixed Network solutions. RF signal is affected differently by building materials used within structures and it is difficult to account for all types of construction. If the Scope states inside MIU used for study, an average loss value is applied to the model. In situations, where inside MIUs do not perform as necessary, an external wall MIU or additional Gateways may be required
- Propagation based on defined MIU (External Wall or Pit w/External Antenna) with specified gateway/collector. Older equipment should be replaced. Propagation is subject to change based on equipment specifications and performance. Performance cannot be confirmed until final system evaluation and analysis complete. Propagation model is based on performance for >90% daily read success and typical noise level <-120dBm. Use of this propagation analysis done with this understanding and there is no guarantee of product or performance. Additional gateways could be required. Antenna heights are set to 75 feet as default unless heights provided. This affects Find (search ring) and asset locations.
- Tektelic LoRa gateway is not released and propagation is in development. Receiver diversity requires minimum of 6 feet horizontal antenna separation.

Confidential Information

INTENTIONALLY LEFT BLANK

Quotation
Valid From: 3/6/2020
Valid To: 3/6/2021

Document
QUO-73747-V3V4B0

NEPTUNE TECHNOLOGY GROUP
1600 Alabama Highway 229 South,
Tallassee, AL 36078
Telephone: (800) 633-8754 Fax: (334) 283-7293
www.neptunetg.com

Customer : Grain Valley, MO 2020 SaaS Sub	**Ship-To** : Utility Solutions - Ks

Customer Number 10861700	**Salesperson**: Patrick Prasifka Mobile: (334) 391-6128; Email: pprasifka@neptunetg.com

Item	Item Number	Description	Quantity	Unit Price	Extended Price
1	.13812-202	NEPTUNE 360 AMI ADV SUB >5K - 10K SERVICES	5,426	$1.89	$10,255.14
2	.13812-002	NEPTUNE 360 ADVANCED SET UP FEE (SaaS PF)	1	$0.00	$0.00

Subtotal: $10,255.14

Plus applicable taxes.

Comments:
Thank you for the opportunity to provide pricing. For more details on Neptune Technology Group and our products, please contact your TM or visit our website at www.neptunetg.com.

This quote is valid for 30 days, acceptance will require a valid Purchase Order (PO) number. Neptune Terms and Conditions of Sale and/or Master Services Agreement will apply. Refusal or cancellation may result in a cancellation fee.

Thank You

INTENTIONALLY LEFT BLANK

From: John Daugherty
Sent: Friday, February 28, 2020 4:15 PM
To: Patrick Martin <pmartin@cityofgrainvalley.org>
Cc: Prasifka, Patrick <pprasifka@neptunetg.com>
Subject: Neptune R900 Gateways & Neptune 360 Software Pricing

WARNING: Email originates outside the organization. Please stop and think before clicking a link, opening attachments or entering credentials.

Patrick,
On behalf of Neptune Technology Group, Inc., whom we represent, we are pleased to quote the City of Grain Valley on the following R900 Gateways and Neptune 360 Software needed for your Neptune AMI system. Our recommendation, based on our site visit is to initially install two R900 Gateways: One on the Tyer Rd. water tower and one on the Minter Rd. water tower. Then, we will have Neptune update your Propagation Study for the optimal additional tower location(s). It is estimated to take 3 to 5 Gateways to read >99% of your meters, but these two locations/towers are the easiest and most effective sites to begin with. The Engineering estimate is typically conservative and we'll likely collect more reads per tower than estimated. Our goal will be to read your meters with the least amount of infrastructure, while providing redundancy for an unplanned loss of an active Gateway (i.e. storms, etc.) As you know, we have a presentation scheduled for our new Neptune 360 Software platform on Thurs. March 12th at 10 AM. Neptune 360 is required to implement the R900 Gateways in an AMI system. As you'll see in our presentation, Neptune 360 will provide a whole new level of data to your Customer Service personnel and management team, as well as industry-leading security, storage and access of your data. Regular updates and enhancements of Neptune 360 Software are also done automatically by Neptune without your personnel having to do them. David Evers, Neptune's Regional Systems Support Specialist, will further detail the implementation plans at our meeting. Please let us know if we can offer any other assistance.
We look forward to working with the City of Grain Valley!
Thanks,
John
Utility Solutions Associates, Inc.
20324 West 98th Street
Lenexa, KS 66220
Phone: 913-390-4872
Fax: 913-390-4873
Email: USAjdaugherty@sbcglobal.net
Manufacturer's Representative for Neptune Technology Group, Inc.

KANSAS CITY CHIEFS SUPER BOWL CHAMPIONS!!!

From: Prasifka, Patrick
Sent: Friday, February 28, 2020 1:59 PM
To: usajdaugherty@sbcglobal.net
Subject: Gateway Pricing

13218-000	*R900 Gateway - Cellular*	*1*	*$5,250.00*

13070-100	*UPS - Outdoor System Assembly, Wall/Pole*	*1*	*$1,500.00*
13146-100	*RF Antenna w/ Brackets*	*1*	*$290.00*
13135-001	*RF Antenna 25" Tower Standoff*	*1*	*$250.00*
13134-000	*RF Antenna Mounting Bracket Assembly*	*1*	*$60.00*
13147-000	*External Cellular Antenna Mounting Kit*	*1*	*$226.00*
			$7,576.00

MEMORANDUM

TO: MARK TROSEN, DIRECTOR OF COMMUNITY DEVELOPMENT

FROM: PATRICK MARTIN, MAINTENANCE SUPERINTENDENT

SUBJECT: NEPTUNE FIXED BASE METER READING SYSTEM

DATE: MARCH 25TH, 2020

In order to provide a reliable, high quality water supply system, Public Works continually upgrades and improves our water system and facilities. When producing the annual 2020 budget we identified an upgrade needed for the water meter reading system.

The current system uses a laptop computer and a data collector mounted in a truck the requires Public Works staff to drive the routes to collect the reads. Then after collecting the reads return to City Hall and transfer the data file to Utility Billing staff. The new system will be a fixed base system. This will allow meter reads to be collected at intervals determined by the Utility Billing and as needed based on department needs. With this system crews will no longer have to drive the routes to collect the reads.

Neptune Technology completed a study of the existing assets and topography of Grain Valley. The study concluded five data collectors were needed to read greater than 99% of the meters. The new system will be mounted first on existing structures such as water towers to collect reads. Public Works will start by mounting one antenna on each of the two water towers to see how much is read. Then staff will reevaluate the study and fill in the gaps. Staff hopes by starting with two units and measuring the progress, we can ensure the City is getting the most out of each data collector. Also, staff plans to not get all five units to begin with could prove to show costs savings for units potentially not needed. Public Works Maintenance staff will do as much as the installation as possible and only rely on contractors on specialty items such as electrical if needed.

This Resolution also covers expenses to cover the software upgrade. New software is needed to get the most out of the new system such as alerts and the graphs the meter produce by tracking usage. The software upgrade will also provide great customer service tools to the Utility Billing division; for meter reads at their computer when needed.

INTENTIONALLY LEFT BLANK

CITY OF GRAIN VALLEY BOARD OF ALDERMEN AGENDA ITEM		
MEETING DATE	04/27/2020	
BILL NUMBER	R20-25	
AGENDA TITLE	**A RESOLUTION BY THE BOARD OF ALDERMEN OF THE CITY OF GRAIN VALLEY AUTHORIZING THE CITY ADMINISTRATOR TO SIGN AN AGREEMENT WITH JACKSON COUNTY, MISSOURI FOR DISTRIBUTION OF COMBAT FUNDS OF $82,500.00 FOR THE 2020 FISCAL YEAR**	
REQUESTING DEPARTMENT	POLICE	
PRESENTER	James W. Beale Sr, Chief of Police	
FISCAL INFORMATION	Cost as recommended:	Not Applicable
	Budget Line Item:	100-00-45000
	Balance Available:	Not Applicable
	New Appropriation Required:	[] Yes [X] No
PURPOSE	To collect payment from Jackson County, Missouri's Combat Tax (Anti-Drug Sales Tax) in the amount of $82,500.00	
BACKGROUND	None	
SPECIAL NOTES	Upon execution of this agreement, an initial payment, will be submitted to the City of Grain Valley and the remaining amount will be submitted to the City prior to the end of the City's fiscal year.	
ANALYSIS	Not Applicable	
PUBLIC INFORMATION PROCESS	Not Applicable	

BOARD OR COMMISSION RECOMMENDATION	Not Applicable
DEPARTMENT RECOMMENDATION	Staff Recommends Approval
REFERENCE DOCUMENTS ATTACHED	Resolution & Agreement

CITY OF GRAIN VALLEY **STATE OF MISSOURI**

April 27, 2020

RESOLUTION NUMBER
R20-25

A RESOLUTION BY THE BOARD OF ALDERMEN OF THE CITY OF GRAIN VALLEY, MISSOURI AUTHORIZING THE CITY ADMINISTRATOR TO ENTER INTO AN AGREEMENT WITH JACKSON COUNTY, MISSOURI FOR DISTRIBUTION OF COMBAT FUNDS OF $82,500.00 FOR THE 2020 FISCAL YEAR

WHEREAS, the Board of Aldermen of the City of Grain Valley, must approve all contracts; and

WHEREAS, the City of Grain Valley has requested funds provided by the Jackson County Anti-Drug Tax Fund to assist the City in defraying certain costs of its Drug Abuse Resistance Education (DARE) Program; and

WHEREAS, the upon execution of this agreement, The County agrees to pay the City a total amount not to exceed $82,500.00. The city may submit an invoice documenting cost incurred back to January 1, 2020; and

WHEREAS, Prior to September 30, 2020, and upon receipt and final approval of the previous DARE/Law Enforcement School Based Initiatives Report, the final payment will be submitted to the City prior to the end of the City's 2020 fiscal year.

NOW THEREFORE, BE IT RESOLVED by the Board of Aldermen of the City of Grain Valley, Missouri as follows:

SECTION 1: The City Administrator is authorized to enter into an agreement with Jackson County, Missouri for distribution of COMBAT funds of $82,500.00 for the 2020 fiscal year.

PASSED and APPROVED, via voice vote, (6-0) this 27th Day of April, 2020.

_____
Mike Todd
Mayor

ATTEST:

_____
Jamie Logan
City Clerk

INTENTIONALLY LEFT BLANK

IN THE COUNTY LEGISLATURE OF JACKSON COUNTY, MISSOURI

A RESOLUTION authorizing the Prosecuting Attorney to execute cooperative agreements with certain municipalities within Jackson County for the purpose of funding their 2020 Law Enforcement School-Based Initiatives and related programs, at an aggregate cost to the County not to exceed $1,357,500.00.

RESOLUTION NO. 20367, February 3, 2020

INTRODUCED BY Dan Tarwater III, County Legislator

WHEREAS, the COMBAT staff reviewed requests by certain municipalities for 2020 Law Enforcement School-Based Initiatives and related program funding and provided funding recommendations to the Jackson County Drug Commission on January 16, 2020, for the 2020 calendar year; and,

WHEREAS, the COMBAT staff and the Drug Commission now recommend these school-based drug prevention programs be funded in the following amounts:

Agency Name	**AMOUNT**
Blue Springs Police Department	$ 150,000.00
Grain Valley Police Department	82,500.00
Grandview Police Department	75,000.00
Independence Police Department	300,000.00
Kansas City Police Department	300,000.00
Lee's Summit Police Department	300,000.00
Oak Drove Police Department	75,000.00
Sugar Creek Police Department	75,000.00
TOTAL	**$ 1,357,500.00**

now therefore,

BE IT RESOLVED by the County Legislature of Jackson County, Missouri, that the Prosecuting Attorney be and is hereby authorized to execute Cooperative Agreements with the cities of Blue Springs, Grain Valley, Grandview, Independence, Lee's Summit, Oak Grove, and Sugar Creek and the Kansas City Board of Police Commissioners, at an aggregate cost to the County not to exceed $1,357,500.00, in forms to be approved by the County Counselor; and,

BE IT FURTHER RESOLVED that the Director of the Department of Finance and Purchasing be and hereby is authorized to make all payments, including final payment on the contracts.

Effective Date: This Resolution shall be effective immediately upon its passage by a majority of the Legislature.

APPROVED AS TO FORM:

Chief Deputy County Counselor

County Counselor

Certificate of Passage

I hereby certify that the attached resolution, Resolution No. 20367 of February 3, 2020, was duly passed on February 17, 2020 by the Jackson County Legislature. The votes thereon were as follows:

Yeas 8 Nays 0

Abstaining 0 Absent 1

2.17.2020
Date

Mary Jo Spino, Clerk of Legislature

There is a balance otherwise unencumbered to the credit of the appropriation to which the expenditure is chargeable and there is a cash balance otherwise unencumbered in the treasury to the credit of the fund from which payment is to be made each sufficient to provide for the obligation herein authorized.

ACCOUNT NUMBER: 008 4403 56005
ACCOUNT TITLE: Anti-Crime Sales Tax Fund
COMBAT - D.A.R.E
Community Crime Prevention
NOT TO EXCEED: $1,357,500.00

1/30/2020
Date

Chief Administrative Officer

R. 20367

COOPERATIVE AGREEMENT

(2020 COMBAT Commission DARE/Law Enforcement School Based Initiatives)

AN AGREEMENT by and between Jackson County, Missouri, hereinafter referred to as "County", and, **CITY OF GRAIN VALLEY, MISSOURI 711 MAIN STREET GRAIN VALLEY, MO 64029**, hereinafter referred to as "the City" made and entered into this _____ day of _____, 2020.

WHEREAS, the City has requested funding from County's Anti-Crime Sales Tax Funds to assist the City in defraying certain costs of its Drug Abuse Resistance Education (DARE)/Law Enforcement School Based Initiatives, or similar anti-drug and anti-violence programs, and,

WHEREAS, the County's Jackson County COMBAT Commission recommended and the County Legislature approved the City's request as an appropriate expenditure of Anti-Crime Sales Tax Funds; and,

WHEREAS, this Agreement provides a suitable mechanism by which the designated County funds shall be disbursed to the City;

NOW THEREFORE it is agreed by and between the parties as follows:

1. The County agrees to pay to the City a total amount not to exceed **$82,500.00**. Upon execution of this agreement, Organization may submit an invoice documenting costs incurred dating back to January 1, 2020. Prior to September 30, 2020, and upon receipt and approval of the previous DARE/Law Enforcement School Based Initiatives Semester Report, the final payment shall be made. This award is contingent upon collection of sales taxes as budgeted at the time of the contract award. If COMBAT funds are reduced, contractor will be informed of necessary contract revisions, as provided for in this Agreement.

2. The County agrees and acknowledges that the City shall use the proceeds of this Agreement, together with City funds and any federal or state grant funds which may have been awarded, to cover certain expenses of its DARE/Law Enforcement School Based Initiatives, or similar anti-drug and anti-violence programs, all as is more fully set out in the funding request and other documents attached hereto as Exhibit A, Program Budget Page attached hereto.

3. The City agrees that all proceeds of this Agreement shall be subject to audit by the County's Legislative Auditor or such other auditor as the County may designate. Additionally, the City agrees to contract for the performance of a comprehensive audit in conformance with the Single Audit Act of 1984, and to forward two copies of the audit report to the Jackson County COMBAT Commission, one of which will be forwarded to the County's Department of Finance and Purchasing.

4. The City shall provide an annual program report at the end of each calendar year summarizing all activities of its DARE/Law Enforcement School Based Initiatives, or similar anti-drug and anti-violence programs to the Jackson County COMBAT Commission containing such particulars as said Commission might specify.

5. If the City receives or obtains any media attention because of this project, the City is required to acknowledge that funding for the project is from COMBAT funds. Printed material involving this program shall contain the COMBAT logo and a COMBAT sign shall be posted at the program site(s) for the duration of the contract.

6. This Agreement shall be effective as of January 1, 2020, and extend through December 31, 2020, for expenses incurred during the same time period.

7. The City shall indemnify, defend, and hold the County harmless from any and all claims, liabilities, damages, and costs (including reasonable attorney's fees directly related thereto) to the extent allowable by law caused by the negligence or willful misconduct of the City or its employees, agents or representatives.

8. If the City shall default in the performance or observation of any term or condition herein, the County shall give the City ten (10) days' written notice setting forth the default. If said default shall continue for ten (10) days after the City receives written notice thereof, the County may at its election terminate the Agreement and withhold any payments not yet made to the City. Said election shall not in any way limit the County's or the City's right to sue for breach of contract.

9. The City warrants that no officer or employee of the County, whether elected or appointed, shall in any manner whatsoever be interested in or receive any benefit from the profits or emoluments of this Agreement.

10. Pursuant to §285.530.1, RSMo, City assures that it does not knowingly employ, hire for employment, or continue to employ undocumented immigrants to perform work within the State of Missouri and/or Jackson County, and shall affirm, by sworn affidavit and provision of documentation, its enrollment and participation in a federal work authorization program with respect to the employees working in connection with the contracted services. Further, City shall sign an affidavit, attached hereto and incorporated herein as Exhibit B, affirming that it does not knowingly employ any person who is an unauthorized alien in connection with the contracted services.

11. This Agreement may be terminated for any reason or no reason by either of the parties upon thirty (30) days written notice to the party's designated fiscal representative. All services and payments shall continue through the effective date of termination. Termination of this Agreement shall not constitute a waiver of the rights or obligations which the County or the City may be entitled to receive as provided in this Agreement, or be obligated to perform under this Agreement for services prior to the date of termination. Should this Agreement terminate, all County written materials of any kind must be delivered and returned by the City to the County within ten (10) days of the termination of this Agreement.

(Signature page to follow)

IN WITNESS WHEREOF, this Agreement has been executed this _____ day of _____, 2020.

APPROVED AS TO FORM:

_____
Bryan O. Covinsky
County Counselor

JACKSON COUNTY, MISSOURI

By: _____
Jean Peters Baker
Prosecuting Attorney

ATTEST:

_____
Mary Jo Spino
Clerk of the County Legislature

CITY OF GRAIN VALLEY, MISSOURI

By: _____

Title: _____

REVENUE CERTIFICATE

I hereby certify that there is a balance otherwise unencumbered to the credit of the appropriation to which this contract is chargeable, and a cash balance otherwise unencumbered in the treasury to the credit of the fund from which payment is to be made, each sufficient to meet the obligation of **$82,500.00**, which is hereby authorized.

_____
Date

_____
Director of Finance and Purchasing
Account No.008-4403-56005

R. 20367
Exhibit B

WORK AUTHORIZATION AFFIDAVIT

As a condition for any service provided to the County, a business entity shall, by sworn affidavit and provision of documentation, affirm its enrollment and participation in a federal work authorization program with respect to the employees working in connection with the contracted services.

Business entity, as defined in section 285.525, RSMo pertaining to section 285.530, RSMo, is any person or group of persons performing or engaging in any activity, enterprise, profession, or occupation for gain, benefit, advantage, or livelihood. The term "business entity" shall include but not be limited to self-employed individuals, partnerships, corporations, contractors, and subcontractors. The term "business entity" shall include any business entity that possesses a business permit, license, or tax certificate issued by the state, any business entity that is exempt by law from obtaining such a business permit, and any business entity that is operating unlawfully without such a business permit.

Every such business entity shall complete the following affidavit affirming that it does not knowingly employ any person who is an unauthorized alien in connection with the contracted services. The completed affidavit must be returned as a part of the contract documentation.

This affidavit affirms that **City of Grain Valley, Missouri**, is enrolled in, and is currently participating in, E-verify or any other equivalent electronic verification of work authorization operated by the United States Department of Homeland Security under the Immigration Reform and Control Act of 1986 (IRCA); and, **City of Grain Valley, Missouri**, does not knowingly employ any person who is an undocumented immigrant in conjunction with the contracted services.

In Affirmation thereof, the facts stated above are true and correct. (The undersigned understands that false statements made in this filing are subject to the penalties provided under section 575.040, RSMo.)

_____	_____
Authorized Representative's Signature	Printed Name
_____	_____
Title	Date

Subscribed and sworn before me this _____ day of _____, 2020. I am commissioned as a notary public within the County of _____, State of _____, and my commission expires on _____.

_____	_____
Signature of Notary	Date

Grain Valley Police Department
Law Enforcement School Based Budget
(January 01, 2020 – December 31, 2020)

Budget Categories	Propose COMBAT Budget	Other Funding Amount	Name of other Funding Sources	Total Program Cost
Personnel – Salaries	$39,739.00	$4,415.00	City of Grain Valley Geneal Fund	$44,154.00
Fringe Benefits (Describe; max 10% of Salaries)	$4,415.00	$22,191.00	City of Grain Valley General Fund	$26,606.00
Auditing / Accounting Services	$0.00	$0.00		$0.00
Evaluation	$0.00	$0.00		$0.00
Postage	$0.00	$0.00		$0.00
Printing	$0.00	$0.00		$0.00
Meeting Expense	$0.00	$0.00		$0.00
Mileage (Local Travel)	$3,500.00	$0.00		$3,500.00
Training	$6,000.00	$0.00		$6,000.00
Memberships	$240.00	$0.00		$240.00
Insurance	$0.00	$0.00		$0.00
Program Supplies	$12,500.00	$0.00		$12,500.00
RAD Program	$2,000.00	$0.00		$2,000.00
Phone Service	$2,500.00	$0.00		$2,500.00
RMS Software	$1,000.00	$0.00		$1,000.00
Truth About Drugs Program - Addiction is Real	$3,000.00	$0.00		$3,000.00
Indirect (max:7% of total)	$7,606.00	$0.00		$7,606.00
Total Proposed Budget	**$82,500.00**	**$26,606.00**		**$109,106.00**

1. COMBAT funds may not be used to provide capital improvements (Article 6, Section 23 of the Mo. Constitution).
2. Funds may not be used to pay salaries for functions that have traditionally been performed by volunteers.
3. COMBAT funds may not be used to pay rent, utilities, equipment or for out of town travel.

CITY OF GRAIN VALLEY BOARD OF ALDERMEN AGENDA ITEM		
MEETING DATE	04/27/2020	
BILL NUMBER	R20-26	
AGENDA TITLE	**A RESOLUTION BY THE BOARD OF ALDERMEN OF THE CITY OF GRAIN VALLEY, MISSOURI AUTHORIZING THE CITY ADMINISTRATOR TO LEASE A SKID STEER FOR THE PUBLIC WORKS DIVISION TO COMPLETE ROUTINE TASKS AND PROJECTS**	
REQUESTING DEPARTMENT	Community Development	
PRESENTER	Mark Trosen – Director Community Development	
FISCAL INFORMATION	Cost as recommended:	$15,536.04
	Budget Line Item:	210-55-78500 600-60-78500 600-65-78500
	Balance Available:	$11,380.00 $106,235.00 $23,235.00
	New Appropriation Required:	[ ] Yes [X] No
PURPOSE	To have equipment available to perform routine tasks in the Public Works Division for public services	
BACKGROUND	The City has leased skid steer units since 2011.	
SPECIAL NOTES	NONE	
ANALYSIS	NONE	

PUBLIC INFORMATION PROCESS	NONE
BOARD OR COMMISSION RECOMMENDATION	NONE
DEPARTMENT RECOMMENDATION	Staff Recommends Approval
REFERENCE DOCUMENTS ATTACHED	Resolution, Kirby Smith Machinery equipment quote, memo, Takeuchi brochure

CITY OF GRAIN VALLEY **STATE OF MISSOURI**

April 27, 2020

RESOLUTION NUMBER
R20-26

A RESOLUTION BY THE BOARD OF ALDERMEN OF THE CITY OF GRAIN VALLEY, MISSOURI AUTHORIZING THE CITY ADMINISTRATOR TO LEASE A SKID STEER FOR THE PUBLIC WORKS DIVISION TO COMPLETE ROUTINE TASKS AND PROJECTS

WHEREAS, the Board of Aldermen adopted Resolution 06-28 establishing purchasing procedures for the City of Grain Valley, Missouri; and

WHEREAS, the Board of Aldermen adopted Ordinance 2485 establishing the budget for Fiscal Year 2020 on December 9th, 2019, appropriating funds for the skid steer lease; and

WHEREAS, the recommendation is in accordance with the adopted purchasing policy and the approved budget for skid steer lease; and

WHEREAS, upon execution of this agreement the City of Grain Valley will receive the skid steer from Kirby Smith Machinery.

NOW THEREFORE, BE IT RESOLVED by the Board of Aldermen of the City of Grain Valley, Missouri as follows:

SECTION 1: The City Administrator is authorized to enter into an agreement with Kirby Smith Machinery to provide a Tekeuchi TL10V2 skid steer.

PASSED and APPROVED, via voice vote, (-) this __ Day of _____, 2020.

_____
Mike Todd
Mayor

ATTEST:

_____
Jamie Logan
City Clerk

INTENTIONALLY LEFT BLANK

EQUIPMENT SALES ORDER

SELLER'S COPY

Date: 2020-03-04

EQPO#: sstevens-1670

Customer #: GRAIN004 PO/Check #: Salesman: Shawn Stevens Support Contact: Mark Tadlock

Buyer's Name: Patrick Martin Company: CITY OF GRAIN VALLEY Phone: 8168476285 Fax:

Address: 711 S Main Street County: Jackson

City: Grain Valley State: MO Zip: 64029

Delivery Address / Point of Possession: Kansas City KSM Yard Delivery County: Jackson

Qty.	Unit#	Make, Model, Description	Serial#	Price
1	TBD	2020 TAKEUCHI TL10V2 HIGHFLOW Cab with Air Conditioning/Heat, Defroster, 15.7" Rubber Tracks, Hydraulic quick attach, Roll up Lexan door, AM/FM/MP3 Radio, HIGH FLOW Auxiliary Hydraulics w/ second auxillary line 76" HD DIRT BUCKET WITH 8 TEETH, 20.3 CU FT CAPACITY Lease Based on 500 hours per year 36 months= $1294.67/MO Purchase Option of $18,000.00 at Lease end This is a quote only, subject to Final Lender Review and Approval	TBD	$60,942.48
			Taxable Total:	$60,942.48
			Interest:	$0.00
			TOTAL PRICE:	$60,942.48

FINANCIAL ARRANGEMENTS: *(upon approval)*

Purchaser hereby bargains, sells and conveys unto Seller the below described Trade-in Equipment and warrants and certifies it to be free and clear of liens, encumbrance, and security interests, except to the extent shown below. All trade-ins are subject to equipment being "as inspected condition" by Seller at time of delivery.

Trade Description	Trade Allowance
	$0.00
	$0.00
I. Total Trade Allowance:	$0.00
II. Less Amount Owed To:	$ 0.00
III. Net Trade Allowance (I - II)	$0.00
IV. Other (Specify)	
V. Trade Down Payment *(Transfer $ to item 2 at right)*	$0.00

1. Cash Down Payment:			$0.00
2. Trade Down Payment:			$0.00
3. Total Down Payment:			$0.00
4. Unpaid Cash Price:			$60,942.48
5. State Tax: 0.000%	City Tax: 0.000%	CO. Tax: 0.000%	$0.00
6. F.E.T. 0.000%	HEIT: 0.000000%	TERP: 0.000000%	$0.00
7. CASH DUE ON DELIVERY (4-6)			$60,942.48

The undersigned warrants that he/she has authority to execute this Equipment Purchase Agreement and to bind said company to the terms contained herein. Payments are to be in accordance with the terms set forth on invoices and shall be due to Kirby-Smith Machinery, Inc. at its office address as listed above. Past due amounts, 30 days or over, are subject to time price differential of 1.5% per month (18% per annum.) Should the service of any agency or attorney be necessary to collect amounts outstanding, I/we agree to pay all costs of such collection including reasonable attorney fees. Notice is hereby given that Kirby-Smith Machinery, Inc. has assigned its rights under all sales contracts of rental equipment to KSM Exchange, LLC to sell the rental equipment described therein and, if applicable, to purchase trade-in property described therein.

EQUIPMENT WARRANTY

Warranty coverage on the equipment covered by this order, if any, has been explained to Purchaser. The warranty coverage is outlined below and indicated by the box checked.

☐ **NEW** — **Manufacturer Warranty** subject to qualification. If qualified, the following terms apply only if box at left is checked. Purchaser acknowledges He/She has read (Both Pages) and received a copy of this entire order and acknowledges the **DISCLAIMER OF WARRANTIES AND WAIVER OF CLAIMS** on Page 2 of this Sales Order.

► TAKEUCHI FULL MACHINE 36 MONTHS / 3000 HOURS;

☐ **USED** — When the equipment covered by this order is used equipment. THE PURCHASER STATES THAT HE/SHE HAS EXAMINED THE EQUIPMENT and is buying the equipment AS IS and with NO REPRESENTATION OR WARRANTIES, unless otherwise specified in writing below:

ACKNOWLEDGEMENT: _____ / _____
Purchaser & Salesman's initials

NO AGREEMENTS OTHER THAN THOSE EITHER PRINTED OR WRITTEN ON THIS ORDER ARE BINDING ON EITHER PARTY OF THIS CONTRACT.
This order is subject to the terms and conditions set forth on pages 1 and 2 of this document, including the applicable manufacturer's warranty.
PURCHASER ACKNOWLEDGES HE/SHE HAS READ (BOTH PAGES) AND RECEIVED A COPY OF THIS ENTIRE ORDER.

By: _____ Authorized Signature Date: _____

Title: _____

Salesman: Shawn Stevens

KIRBY-SMITH MACHINERY, INC.

By: Patrick Martin Date: _____

Signed X: _____ Authorized Signature

Title: _____

PURCHASER

Version 10-2018

EQUIPMENT SALES ORDER

ADDITIONAL TERMS & CONDITIONS

(Referred to on the Reverse Side Hereof)

1. The Seller reserves the right to accept or reject this order and shall not be required to give any reason for non-acceptance.

2. If financing terms are required on this order, Seller's acceptance is subject to the approval of the Lender. If financing terms are required, Purchaser hereby agrees to execute any security agreement and any financing statement required by Lender, and authorizes Seller to execute any such documents in Purchaser's name.

3. This order, when accepted by Seller, shall become a binding contract, but performance shall be conditioned upon and subject to strikes, lockouts, accidents, fires, delays in manufacture or transportation, supply shortages, acts of God, embargoes, governmental action or any other causes beyond the control of the Seller whether the same as, or different from the matters and things herein before specifically enumerated and any of said causes having an adverse effect on Seller's ability to perform shall absolutely absolve the Seller from any liability to the Purchaser under the terms hereof.

4. Title to and right of possession of said product(s) shall remain vested in the Seller until all indebtedness and all sums due or to become due from the Purchaser, whether evidenced by note, book account, judgment, or otherwise, shall have been fully paid, at which time title shall pass to the Purchaser.

5. The Seller's responsibility for shipments ceases upon delivery to a transportation company, and any claims for shortages, delays or damages occurring thereafter shall be made by the Purchaser to the transportation company. Any claims against the Seller for shortages in shipments shall be made within fifteen days after delivery by the transportation company to the point of delivery.

6. The Purchaser agrees that this order shall not be countermanded by him, and that when it is accepted (and until the execution and delivery of the contractor contracts and note or notes required to consummate the sale as above specified) it will incorporate all agreements between the parties relative to this transaction, and that the Seller is not bound by any representations or terms made by any agent relative to this transaction which are not contained here. This order shall not be binding upon the Seller until it is duly accepted in writing by an authorized official of the Seller. Any changes or modifications to this contract shall be made in writing and signed by both the Seller and Purchaser.

7. When the products necessary to fill this order have been appropriated to this contract, the Purchaser agrees on demand to execute and deliver to the Seller the notes and contracts required by the Seller to evidence the transactions, in the event the Purchaser fails to execute and deliver said notes and contracts to the Seller, the entire balance of the purchase price shall upon Seller's tender of performance and at the Seller's option become immediately due and payable.

8. Purchaser shall promptly pay all taxes, fees, transportation, and other costs, assessments and all governmental charges of any kinds or character, and any penalties, fines or interest thereon relating to equipment and the sale thereof by Seller to Purchaser.

9. Purchaser acknowledges that he/she has received a copy of any equipment warranty provided by the manufacturer and has read and understood said warranty.

10. **DISCLAIMER OF WARRANTIES AND WAIVER OF CLAIMS.** KIRBY-SMITH MACHINERY, INC. (SELLER) IS NOT A MANUFACTURER OF EQUIPMENT. ALTHOUGH SELLER MAY ADMINISTER WARRANTIES ISSUED BY THE MANUFACTURER, CUSTOMER ACKNOWLEDGES AND AGREES THAT: 1) ANY EXPRESS WARRANTIES BY THE MANUFACTURER FOR THE EQUIPMENT ARE NOT THE RESPONSIBLITIES OF THE SELLER. 2) THE MANUFACTURER'S WARRANTY CONTAINS LIMITATIONS AND CUSTOMER MAY INCUR CERTAIN REPAIR, TRANSPORTATION OR OTHER CHARGES BY SELLER WHICH ARE NOT COVERED BY THE MANUFACTURER'S WARRANTY. SELLER MAKES NO WARRANTIES, REPRESENTATIONS, CONDITIONS OR PROMISES EXPRESS OR IMPLIED AS TO THE QUALITY, PERFORMANCE OR FREEDOM FROM DEFECT OF THE EQUIPMENT. EXCEPT ANY IMPLIED WARRANTIES THAT CANNOT BE DISCLAIMED UNDER APPICABLE LAW, SELLER HEREBY DISCLAIMS AND EXCLUDES ALL WARRANTIES OF TITLE, EXPRESS WARRANTIES AND IMPLIED WARRANTIES, INCLUDING, BUT NOT LIMITED TO, IMPLIED WARRANTIES OF MERCHANTABILITY, FITNESS FOR A PARTICULAR PURPOSE, INFRINGEMENT AND THOSE WARRANTIES ARISING OUT OF USAGE OF TRADE OR COURSE OF DEALING. SELLER IS NOT LIABLE FOR ANY DAMAGES (WHETHER ORDINARY, SPECIAL OR PUNITIVE) ARISING FROM ANY FAILURE OF THE EQUIPMENT TO OPERATE OR THE FAULTY OPERATION OF THE EQUIPMENT, OR THE INSTALLATION, OPERATION, REPAIR OR USE OF THE EQUIPMENT.

11. Purchaser agrees to indemnify, defend and hold harmless Seller for any and all claims, damages, causes of action, losses, costs and expenses, including reasonable attorneys' fees, arising from or relating to, directly or indirectly, (a) any breach of this order by Purchaser, including any representation or warranty, and (b) any use or operation of the equipment, including without limitation, any property damage, injury or death caused by such use or operation.

12. This contract is to be governed in accordance with the laws of the State of Oklahoma.

13. **Purchaser acknowledges Seller's Procedure for obtaining wiring instructions.**
For wire instructions please call (405) 495-7820 and ask for our Credit Department. They will immediately e-mail or fax you instructions for our account at Wells Fargo and follow up immediately with a phone call. These instructions will be on Kirby-Smith Machinery, Inc. letterhead. This is the only manner we will send you our instructions. If you receive wire instructions in any other way, do not wire the funds and please immediately report it to our Credit Department using the number above.

PURCHASER ACCEPTS TERMS & CONDITIONS

_____ _____

Purchaser's Signature *Date*

BILL OF SALE FOR PROPERTY TAKEN IN TRADE

For value received, I/we hereby grant, sell, transfer and deliver unto:

Kirby-Smith Machinery Inc. Kansas City

at address: _____

_____

Purchaser warrants that I/we are the absolute sole owner of the Trade-In Equipment, and full power and authority to sell the Trade-In Equipment. I/we hereby certify that there is no lien, claim, debt, mortgage or encumbrance of any kind, nature or description against this property now existing, of record or otherwise, and that same is free and clear. I/we agree to assume all risk of loss and/or damage to above described equipment, beyond normal wear, until delivery is promptly affected.

_____ _____

Authorized Signature *Title*

MEMORANDUM

TO: MARK TROSEN, DIRECTOR OF COMMUNITY DEVELOPMENT

FROM: PATRICK MARTIN, MAINTENANCE SUPERINTENDENT

SUBJECT: 2020 SKID STEER LEASE

DATE: APRIL 15TH, 2020

In order to provide a reliable, high quality public service, Public Works uses a skid steer unit to complete routine tasks, projects, and programs. When producing the annual 2020 budget we budgeted funds to lease a skid steer unit.

Public Works Division uses a skid steer unit to do multiple jobs. Those jobs range from asphalt repair, concrete tear out, yard restoration, loading materials in dump trucks, and moving pallets. The jobs can range from large to small but all very important on a weekly basis in Public Works operations.

Public Works staff has went through processes to identify a machine that best fits our needs. Staff tried several brands and sizes of skid steer. The unanimous consensus was the Takeuchi TL 10V2. This unit will have all the essentials to complete Public Works tasks and suit all the needs in Public Works. This brand is leased, sold, and warrantied by Kirby Smith Machinery out of Kansas City Kansas.

In this agreement the terms will be for 36 months at a cost of 1294.67 per month or lump sum payment of 15,536.04. with a buyout of 18,000.00 The warranty is 36 months or 3,000 hours. If the City does not want to proceed with the lease at any time it can be voided with no penalty. Provided the unit is not in disrepair or beyond the original 500 hour limit per year.

INTENTIONALLY LEFT BLANK

COMPACT TRACK LOADER

TL10V2

TAKEUCHI

From World First to World Leader



Product Features & Specifications

ENGINE

- EPA Final Tier 4 Emission Compliant
- Turbocharged
- High Pressure Common Rail Injection System
- DOC+DPF Exhaust After Treatment
- Automatic Fuel Bleed System
- Active Power Control Power Management System
- Working Modes - Power and ECO
- Dual Element Air Filter
- Dial Throttle Control
- High Capacity Radiator, Hydraulic Oil Cooler and Intercooler Mounted Side-by-Side on Swing Out Frame

ELECTRICAL

- 5’7 Multi-Informational Color Display
- Sealed Rocker Switches
- 12 volt System with 60 amp Alternator
- LED: Two Front and Two Rear
- Engine Preheat
- Hour Meter
- Back-up Alarm
- Horn

UNDERCARRIAGE AND FRAME

- Double Planetary Reduction Drives
- Permanently Sealed Track Rollers with Metal Face Seals
- Fully Welded Frame with Integrated Cross Members
- Two-Speed Travel
- 15.7” Rubber Track
- Grease Type Track Adjuster
- Front and Rear Tie-Down Points and Lift Points
- Rear Bumper Integrated into Frame

OPERATOR’S STATION

- Tilt-up Operator’s Station
- Deluxe High Back Suspension Seat
- Rear View Camera
- Foot Throttle
- Rear Pivoting Lap Bar with Arm Rest
- ROPS / FOPS Structure
- Retractable 2” Seat Belt
- Pressurized Cab with Roll-up Door, A/C, Heat, Defrost and Front Wiper, and AM / FM / MP3 Radio with NOAA Weatherband (optional)
- Retractable 3” Seat Belt (optional)
- 3 Point Retractable Seat Belt (optional)
- Polycarbonate Door and Top Guard (High Flow Only)

HYDRAULIC & WORKING EQUIPMENT

- Vertical Lift Design
- Pilot Hydraulic Controls
- Boom Float with Detent
- Cushioned Boom Cylinders
- Hydraulic Self Leveling
- Proportional Auxiliary Hydraulic Controls with Detent
- Pressure Relieving Flat Faced Coupler Body
- 14-Pin Connector with Push Button Control
- High Capacity Steel Hydraulic Tank
- Mechanical Quick Coupler
- Hydraulic Quick Coupler
  Cab - Standard Equipment
  Canopy - optional
- High Flow Auxiliary Hydraulics 32.8 gpm (optional)
- Ride Control (optional)
- Pattern Change Valve (ISO or H) (optional)

TAKEUCHI FLEET MANAGEMENT

- 2 Year Standard Service
- Minimize Downtime
- Remote Diagnostics
- Utilization Tracking
- Proactive Maintenance
- Control Costs

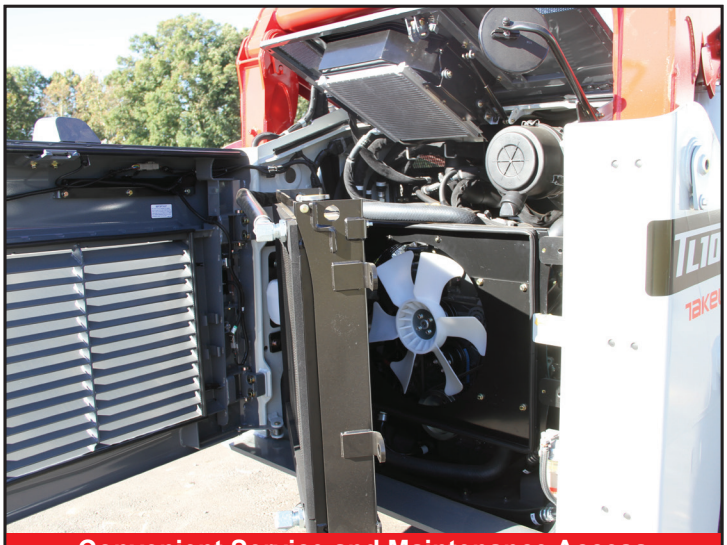

Convenient Service and Maintenance Access



Vertical Lift Path for Balance and Stability

TOUGH, RUGGED, EFFICIENT


Pilot Operated Controls


Battery Access Panel


Lower Cross Member & Step



Oversized Lift Cylinders

The TL10V2 vertical lift track delivers excellent functionality, performance, comfort, and serviceability. It features a completely redesigned operator's station with a 5.7" color multi-information display and updated rocker switches that control a wide range of machine functions. Cab models have a smooth, low effort overhead door that improves entry and egress and enables the loader to be operated with the door in the raised or lowered position. An updated undercarriage with a wide block quiet ride track system provides better flotation, improved ride quality, and a reduction in noise and vibration. A powerful 74.3 horsepower engine meets the latest EPA Tier 4 emissions standards while delivering an outstanding blend of power and torque for impressive performance in the most demanding applications.

Equipped with the Takeuchi Fleet Management (TFM) telematics system critical information such as machine health, condition, diagnostics, and location can be viewed remotely providing valuable real time machine information that will help control costs and keep downtime to a minimum. The Takeuchi Fleet Management system is a real value as the service is free for the first two years of machine ownership.



Spacious operator's platform with easy to reach controls and switches.

OPERATING PERFORMANCE

Operating Weight - Canopy	9,950 lb	(4,515 kg)
Cab	10,270 lb	(4,660 kg)
Tipping Load	7,205 lb	(3,268 kg)
Rated Operating Capacity, SAE J818*	2,522 lb	(1,145 kg)
Operating Load at 50% of Tipping Load	3,600 lb	(1,635 kg)
Bucket Breakout Force	6,520 lb	(2,960 kg)
Lift Arm Breakout Force	5,400 lb	(2,450 kg)
Traction Force	9,730 lb	(4,410 kg)
Ground Pressure - Canopy	4.9 psi	(34.3 kPa)
Ground Pressure - Cab	5.1 psi	(35.4 kPa)
Travel speed - Low	4.8 mph	(7.7 km/hr)
High	7.0 mph	(11.3 km/hr)

* Operating capacity of compact track loaders is rated according to SAE J818 at no more than 35% of the tipping load

HYDRAULIC SYSTEM

Auxiliary Flow - Primary Circuit	18.8 gpm	(71.2 Lpm)
Auxiliary Flow - High Flow (optional)	32.8 gpm	(124.0 Lpm)
Hydraulic System Pressure	3,481 psi	(24.0 MPa)

ENGINE

Make / Model	Kubota / V3307CR-TE4B	
Engine Displacement	203 cu in	(3.3 L)
Horsepower @ 2,600 rpm	74.3 hp	(55.4 kW)
Maximum Torque @ 1,500 rpm	195 ft-lb	(265.0 Nm)

FLUID CAPACITIES

Engine Lubrication	11.8 qt	(11.2 L)
Cooling System	15.9 qt	(15.0 L)
Fuel Tank Capacity	21.5 gal	(81.0 L)
Fuel Consumption (65% of Full Load)	2.7 gal/hr	(10.3 L /hr)
Hydraulic Reservoir Capacity	9.5 gal	(36.0 L)
Hydraulic System Capacity	17.2 gal	(65.0 L)


LCD Display


Rear View Camera



LED Work Lights


Hydraulic Lock

ATTACHMENTS

Takeuchi now offers attachments for all of your Takeuchi equipment.
See your authorized Takeuchi dealer for additional information and attachment options.


Grapple - Scrap


Dozer Blades



Pallet Forks


Trenchers

TL10V2 Compact Track Loader

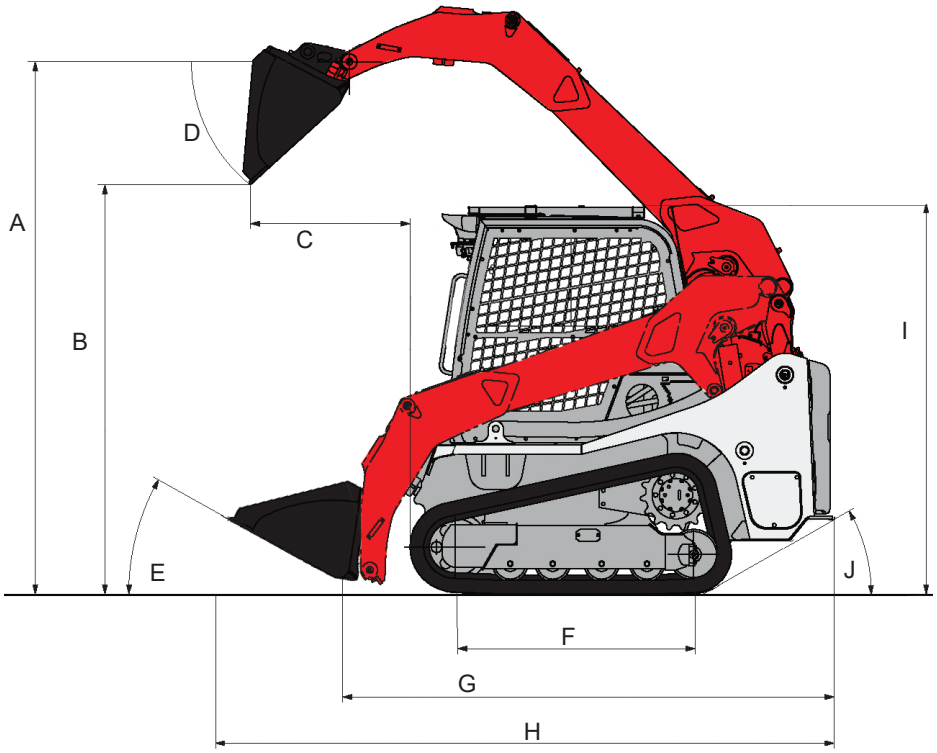

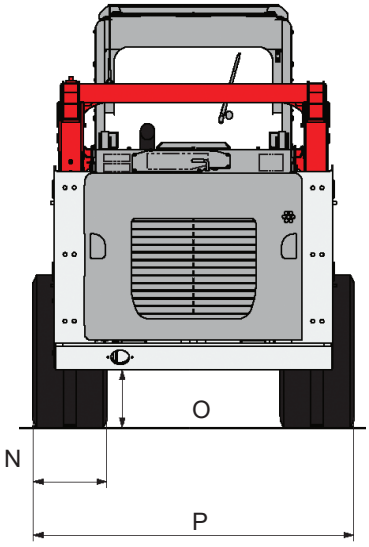

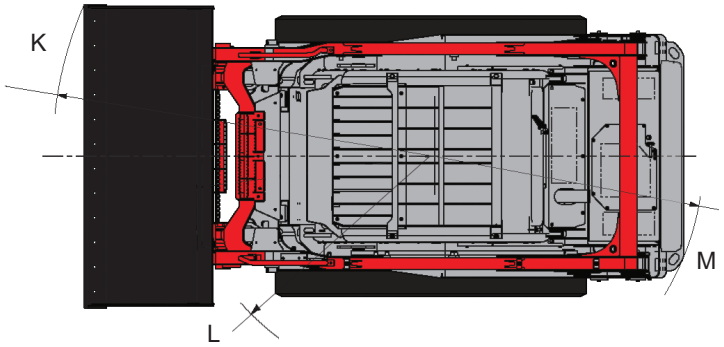

	MACHINE DIMENSIONS		
A	Maximum Lift Height to Bucket Pin	10 ft 4.8 in	(3,169 mm)
B	Dump Height Fully Raised	7 ft 11.9 in	(2,435 mm)
C	Dump Reach Fully Raised	3 ft 1.4 in	(950 mm)
D	Dump Angle	40°	
E	Rollback Angle	30°	
F	Track Ground Contact Length	4 ft 7.9 in	(1,419 mm)
G	Machine Length	9 ft 7.2 in	(2,925 mm)
H	Transport Length	12 ft 1.0 in	(3,680 mm)
I	Transport Height	7 ft 5.4 in	(2,270 mm)
J	Departure Angle	30°	
K	Clearance Circle with Bucket	7 ft 8.5 in	(2,350 mm)
L	Clearance Circle without Bucket	5 ft 0.0 in	(1,535 mm)
M	Clearance Circle Rear	5 ft 5.2 in	(1,655 mm)
N	Track Width	15.7 in	(400 mm)
O	Ground Clearance	12.6 in	(320 mm)
P	Overall Width without Bucket	5 ft 8.5 in	(1,740 mm)



© 2017 Takeuchi Manufacturing (U.S.), Ltd. All Rights Reserved. Printed in the U.S.A.
In accordance with our established policy of continued improvement, specifications and features are subject to change without notice. Pictures may show options other than standard equipment.
FORM: TL10V2 Compact Track Loader Spec Sheet Apr. 2017

TAKEUCHI
From World First to World Leader

CITY OF GRAIN VALLEY BOARD OF ALDERMEN AGENDA ITEM		
MEETING DATE	April 27, 2020	
BILL NUMBER	R20-27	
AGENDA TITLE	**A RESOLUTION BY THE BOARD OF ALDERMEN OF THE CITY OF GRAIN VALLEY AUTHORIZING THE CITY ADMINISTRATOR TO EXECUTE AN AGREEMENT WITH BLUE NILE CONTRACTORS, INC. FOR THE DILLINGHAM WATER MAIN AND TRAIL**	
REQUESTING DEPARTMENT	COMMUNITY DEVELOPMENT AND PARKS & RECREATION	
PRESENTER	Mark Trosen, Director Community Development	
FISCAL INFORMATION	Cost as recommended:	$294,556.71
	Budget Line Item:	600-60-78940 $156,708.87 200-22-78780 $137,847.84
	Balance Available	600-60-78940 $225,600 200-22-78780 $148,800
	New Appropriation Required:	[ ] Yes [X] No
PURPOSE	To construct a water main loop serving Rosewood Hills Estates area and extend the existing trail on Dillingham Road from Persimmon Drive to Lindenwood Drive and connect existing trail segments completing this section to the northern City Limits.	
BACKGROUND	Both the Dillingham Water Main and Trail are consistent with the Capital Improvement Plan. The Trail is also consistent with the Trails Master Plan, Both projects are within the 2020 Capital Improvement Budget.	
SPECIAL NOTES	N/A	

ANALYSIS	Project bids received on April 8, 2020 with the lowest responsible bid submitted by Blue Nile Constructors, Inc in the amount of $294,556.71. The bid amount is within budget for both the water main extension and trail extension. In addition the bid is below the Engineer's estimate.
PUBLIC INFORMATION PROCESS	Project was publicly advertised on March 16, 2020 and Bids were publicly opened on April 8, 2020
BOARD OR COMMISSION RECOMMENDATION	The Parks Board has recommended the Trail Project.
DEPARTMENT RECOMMENDATION	The Community Development and Parks and Recreation Staff Recommend Approval
REFERENCE DOCUMENTS ATTACHED	Resolution, Recommendation from Lamp Rynearson, Blue Nile Contractors, Inc bid submittal, Bid Tabulation, Project Cost Split between budget line items

CITY OF GRAIN VALLEY **STATE OF MISSOURI**

April 27, 2020
RESOLUTION NUMBER
R20-27

A RESOLUTION BY THE BOARD OF ALDERMEN OF THE CITY OF GRAIN VALLEY, AUTHORIZING THE CITY ADMINISTRATOR TO EXECUTE AN AGREEMENT WITH BLUE NILE CONTRACTORS, INC. FOR THE DILLINGHAM WATER MAIN AND TRAIL

WHEREAS, the Board of Aldermen are committed to providing safe drinking water and fire protection to the residents of Grain Valley; and

WHEREAS, the Board of Aldermen of the City of Grain Valley is committed to providing safe, pedestrian connectivity for the residents of our community; and

WHEREAS, the Board of Aldermen has appropriated the funds for the construction of the Dillingham Water Main and Trail extensions; and

WHEREAS, bids were received on April 8, 2020 for the construction of the Dillingham Water Main and Trail extensions; and

WHEREAS, Blue Nile Contractors, Inc. submitted the lowest responsible, responsive bid for the project.

NOW THEREFORE, BE IT RESOLVED by the Board of Aldermen of the City of Grain Valley, Missouri as follows:

SECTION 1: The City Administrator is hereby authorized to enter into an agreement with Blue Nile Contractors, Inc. for the construction of the Dillingham Water Main and Trail extensions:

PASSED and APPROVED, via voice vote, (-) this ____ Day of April, 2020

_____
Mike Todd
Mayor

ATTEST:

_____
Jamie Logan
City Clerk

INTENTIONALLY LEFT BLANK

LAMP RYNEARSON

9001 State Line Rd., Ste. 200
Kansas City, MO 64114
[P] 816.361.0440
[F] 816.361.0045
LampRynearson.com

April 13, 2020

Ms. Jamie Logan
City Clerk
City of Grain Valley, MO
711 Main Street
Grain Valley, Missouri 64029

Re: Dillingham Water Line and Trail Project

Dear Ms. Logan:

Bids were received for the above referenced project on Wednesday, April 8, 2020.

A total of five bids were received. The bids were well distributed between the low and high bids, with three of the bids below the Engineer's Estimate. The low bid was submitted by Blue Nile Contracting Inc. of Birmingham, Missouri with a bid of $294,556.71. The engineers estimate for the project was $395,830.00.

Blue Nile provided a list of similar projects and a listing of proposed subcontractors and major suppliers, attached. Also attached is the completed detailed bid tabulation. Blue Nile proposes to exceed the contract minimum self-performance requirement by performing approximately 78% of the work.

Blue Nile has an extensive list of projects in Kansas City, MO and other municipalities. I was unable to contact the KCMO references, but Tom Nebergall with the City of Gladstone provided a positive reference for their work. Lamp Rynearson recommends accepting the bid received from Blue Nile for the Dillingham Water Line and Trail project in the amount of $294,556.71. If you have any questions, or need additional information, please contact me at 816-823-7228.

Sincerely,

LAMP RYNEARSON

Daniel G. Miller, P.E.
Civil Design Group Leader

Email c: Dick Tuttle, P.E. – City Engineer
Shannon Davies – Parks and Recreation Director
Project File

L:\Engineering\0319030.02 Grain Valley MO Dillingham Rd Waterline\DOCUMENTS\BID PHASE\0319030.02 Dillingham Water Line and Trail Bid Recommendation Letter.docx

BID BOND

Any singular reference to Bidder, Surety, Owner or other party shall be considered plural where applicable.

BIDDER (Name and Address):

Blue Nile Contractors, Inc.
601 Spratley Avenue
Birmingham, MO 64161

SURETY (Name and Address of Principal Place of Business):

North American Specialty Insurance Company
1450 American Lane, Suite 1100
Schaumburg, IL 60173 Ph: 800/338-0753

OWNER (Name and Address):
City of Grain Valley, Missouri
711 Main Street
Grain Valley, MO 64029

PROJECT
Date: April 8, 2020
Amount: FIVE (5%) PERCENT OF TOTAL AMOUNT BID----------
Description (Name and Location):
Dillingham Road Waterline and Trail Project in Grain Valley, MO

BOND
Date: April 8, 2020
Amount: FIVE (5%) PERCENT OF TOTAL AMOUNT BID----------

Surety and Bidder, intending to be legally bound hereby, subject to the terms printed on the reverse side hereof, do each cause this Payment Bond to be duly executed on its behalf by its authorized officer, agent or representative.

BIDDER AS PRINCIPAL
Company: Blue Nile Contractors, Inc. (Corp. Seal)
Signature: [signature]
Name and Title: Henok Teweste, president

SURETY
Company: North American Specialty Insurance Company (Corp. Seal)
Signature: Linda L. Nutt
Name and Title: Linda L. Nutt, Attorney-in-Fact
(Attach certified Power of Attorney)

293113v1

FORM 2-20-03

NOW THEREFORE, Bidder and Surety jointly and severally agree to bind themselves, their heirs, executors, administrators, successors and assigns to pay to Owner upon default of Bidder the penal sum set forth on the face of the Bond and subject to the following terms and conditions:

1. Default of Bidder shall occur upon the failure of Bidder to deliver within the time required by the Bidding Documents the executed Agreement required by the Bidding Documents and the performance and payment bonds required by the Bidding Documents and Contract Documents.

2. This obligation shall be null and void if:

   a. Owner accepts Bidder's bid and Bidder delivers within the time required by the Bidding Documents (or any extension thereof agreed to in writing by Owner) the executed Agreement required by the Bidding Documents and the performance and payment bonds required by the Bidding Documents and Contract Documents, or

   b. All bids are rejected by Owner, or

   c. Owner fails to issue a notice of award to Bidder within the time specified in the Bidding Documents (or any extension thereof agreed to in writing by Bidder.

3. Payment under this Bond will be due and payable upon default of Bidder and within ten (10) calendar days after receipt by Bidder and Surety of written notice of default from Owner.

4. Notice required hereunder shall be in writing and sent via U.S. Mail or hand delivered to both Bidder and Surety at their respective addresses shown on the face of this Bond and shall be deemed to be effective upon receipt by the party concerned.

5. Surety waives notice of and any and all defenses based on or arising out of any time extension to issue notice of award agreed to in writing by Owner and Bidder.

6. Surety shall cause to be attached to this Bond a current and effective Power of Attorney evidencing the authority of the officer, agent or representative who executed this Bond on behalf of Surety to execute, seal and deliver such Bond and bind the Surety thereby.

7. This Bond is intended to conform to all applicable laws. Any applicable requirement of any applicable law that has been omitted from this Bond shall be deemed to be included herein as if set forth at length. If any provision of the Bond conflicts with any applicable provision of any applicable law, then the provisions of said laws shall govern and the remainder of this Bond that is not in conflict therewith shall continue in full force and effect.

Address of Owner:	Address of Bidder:	Address of Surety:
City of Grain Valley, Missouri 711 Main Street Grain Valley, MO 64029	[Insert Name and Address] Blue Nile Contractors, Inc. 601 Spratley Avenue Birmingham, MO 64161	[Insert Name and Address] North American Specialty Insurance Company 1450 American Lane, Suite 1100 Schaumburg, IL 60173 Ph: 800/338-0753

SWISS RE CORPORATE SOLUTIONS

NORTH AMERICAN SPECIALTY INSURANCE COMPANY
WASHINGTON INTERNATIONAL INSURANCE COMPANY

GENERAL POWER OF ATTORNEY

KNOW ALL MEN BY THESE PRESENTS, THAT North American Specialty Insurance Company, a corporation duly organized and existing under laws of the State of New Hampshire, and having its principal office in the City of Kansas City, Missouri, and Washington International Insurance Company, a corporation organized and existing under the laws of the State of New Hampshire and having its principal office in the City of Kansas City, Missouri, each does hereby make, constitute and appoint: Linda L. Nutt

Principal: Blue Nile Contractors, Inc. Bond Number: Bid Bond
Obligee: City of Grain Valley, MO Bond Amount: See Bond Form
Bond Description: Dillingham Road Waterline and Trail Project in Grain Valley, MO

Its true and lawful Attorney(s)-in-Fact, to make, execute, seal and deliver, for and on its behalf and as its act and deed, bonds or other writings obligatory in the nature of a bond on behalf of each of said Companies, as surety, on contracts of suretyship as are or may be required or permitted by law, regulation, contract or otherwise, provided that no bond or undertaking or contract or suretyship executed under this authority shall exceed the amount of:

FIFTY MILLION ($50,000,000.00) DOLLARS

This Power of Attorney is granted and is signed by facsimile under and by the authority of the following Resolutions adopted by the Boards of Directors of both North American Specialty Insurance Company and Washington International Insurance Company at meetings duly called and held on the 9th of May, 2012:

"RESOLVED, that any two of the Presidents, any Managing Director, any Senior Vice President, any Vice President, any Assistant Vice President, the Secretary or any Assistant Secretary be, and each or any of them hereby is authorized to execute a Power of Attorney qualifying the attorney named in the given Power of Attorney to execute on behalf of the Company bonds, undertakings and all contracts of surety, and that each or any of them hereby is authorized to attest to the execution of any such Power of Attorney and to attach therein the seal of the Company; and it is

FURTHER RESOLVED, that the signature of such officers and the seal of the Company may be affixed to any such Power of Attorney or to any certificate relating thereto by facsimile, and any such Power of Attorney or certificate bearing such facsimile signatures or facsimile seal shall be binding upon the Company when so affixed and in the future with regard to any bond, undertaking or contract of surety to which it is attached."

NORTH AMERICAN SPECIALTY INSURANCE COMPANY CORPORATE SEAL 1973 NEW HAMPSHIRE

By _____
Steven P. Anderson, Senior Vice President of Washington International Insurance Company & Senior Vice President of North American Specialty Insurance Company

By _____
Michael A. Ito, Senior Vice President of Washington International Insurance Company & Senior Vice President of North American Specialty Insurance Company

WASHINGTON INTERNATIONAL INSURANCE COMPANY CORPORATE SEAL NEW HAMPSHIRE

IN WITNESS WHEREOF, North American Specialty Insurance Company and Washington International Insurance Company have caused their official seals to be hereunto affixed, and these presents to be signed by their authorized officers this 1st day of February, 2019.

North American Specialty Insurance Company
Washington International Insurance Company

State of Illinois
County of Cook ss:

On this 1st day of February, 2019, before me, a Notary Public personally appeared Steven P. Anderson, Senior Vice President of Washington International Insurance Company and Senior Vice President of North American Specialty Insurance Company and Michael A. Ito, Senior Vice President of Washington International Insurance Company and Senior Vice President of North American Specialty Insurance Company, personally known to me, who being by me duly sworn, acknowledged that they signed the above Power of Attorney as officers of and acknowledged said instrument to be the voluntary act and deed of their respective companies.

OFFICIAL SEAL
M. KENNY
Notary Public - State of Illinois
My Commission Expires
12/04/2021

M. Kenny, Notary Public

I, Jeffrey Goldberg, the duly elected Assistant Secretary of North American Specialty Insurance Company and Washington International Insurance Company, do hereby certify that the above and foregoing is a true and correct copy of a Power of Attorney given by said North American Specialty Insurance Company and Washington International Insurance Company, which is still in full force and effect.

IN WITNESS WHEREOF, I have set my hand and affixed the seals of the Companies this 8th day of April, 2020.

Jeffrey Goldberg, Vice President & Assistant Secretary of
Washington International Insurance Company & North American Specialty Insurance Company

City of Grain Valley, Missouri
711 Main ◊ Grain Valley, MO 64029
Phone: (816) 847-6200 ◊ Fax: (816) 847-6209

DILLINGHAM ROAD WATERLINE AND TRAIL PROJECT

BIDDER'S AFFIDAVIT

STATE OF Mo)
)ss:
COUNTY OF Clay)

I, Heno L Tekeste (Name), representing Blue Nile Contractors (Name of Bidder), (hereinafter "the Bidder") upon oath depose and state that neither the Bidder nor anyone in Bidder's employment has employed any person to solicit or procure this Contract nor will any agent, representative, employee, servant, officer, director, manager or member of Bidder make any payment or agreement for payment of any compensation in connection with the procurement of this Contract.

I further depose and state that no part of the Contract Price was paid or will be paid to any person, corporation, firm, association, or other organization for soliciting the Contract, other than the payment of their normal compensation to persons regularly employed by the Bidder whose services in connection with the construction of the public building or project were in the regular course of their duties for the Bidder.

I further depose and state that the Bid is genuine and not collusive or sham; that said Bidder has not colluded, conspired, connived, or agreed, directly or indirectly, with any Bidder or person, to put in a sham bid or to refrain from bidding, and has not in any manner, directly or indirectly, sought by agreement, or collusion, or communication, or conference with any person to fix the bid price of Bidder or of any other Bidder, and that all statements in said Bid are true.

I further depose and state that Bidder has and will continue to comply with any Affirmative Action Plan and Disadvantaged Business Enterprise Plan of the City of Grain Valley, Missouri, as well as all Ordinances and directives of the City referring to the participation of Small, Disadvantaged, Women owned and Minority Businesses applicable to this Bid and the Contract to be awarded through this Bidding Process.

I further depose and state that the undersigned, the Bidder, and all, officers, directors, employees and agents of Bidder and all Subcontractors and Suppliers Bidder intends to use if awarded the Contract, are not currently debarred or suspended from bidding on contracts with any governmental entity or agency, nor are any such persons or companies proposed to be debarred or suspended from bidding on such contracts, nor have any such persons or companies been excluded from participating in the Contract to be awarded through this bid process by any federal, state or local governmental entity or agency.

I further depose and state that neither the Bidder, nor any person who is an agent, representative, employee, servant, officer, director, manager or member of the Bidder has offered, gave, or agreed to give any employee or former employee of the City, any gratuity, payment or gift in connection with any decision, approval, disapproval, or recommendation, influencing the content of any specification or procurement standard, rendering of advice, investigation, auditing, or in any other advisory capacity in any proceeding or application, request for filing, determination, claim or controversy, or other particular matter, pertaining to any program requirement or a contract or subcontract, or to any solicitation or proposal therefore.

I further depose and state that Bidder has not received any payment or gratuity from a Subcontractor or Supplier, as an inducement for the award of a subcontract or a purchase order.

The undersigned further warrants that he or she has the authority to execute this affidavit on behalf of the Bidder.

Signature

On this 8th day of April, 2020, before me, a Notary Public, personally appeared Henok Tekeste, to me known to be the person who executed the within Bidder's Affidavit, and acknowledged to me that he/she executed the same for the purposes therein stated.

Notary Public

My commission expires:

10-10-2020

LACEY MAE OGNIBENE
Notary Public - Notary Seal
STATE OF MISSOURI
Clay County
My Commission Expires: Oct. 10, 2020
Commission #16689642

AFFIDAVIT of COMPLIANCE

(Section 285.530.2, Revised Statutes of Missouri)

State of Missouri)
) ss:
County of Clay)

Now this 8 day of April, 2020, the undersigned, being first duly sworn, deposes and says:

1. I am more than 18 years of age.

2. I make this affidavit from my personal knowledge of the facts stated herein or upon information and facts available to me as a duly authorized owner, partner, corporate, or LLC officer or Human Relations Director of Blue Nile Cont. ("Contractor").

3. I am authorized to make this affidavit on behalf of Contractor.

4. I state and affirm that Contractor is enrolled and is currently participating in E-Verify, a federal work authorization program or another equivalent electronic verification of work authorization program operated by the United States Department of Homeland Security under the Immigration Reform and Control Act of 1986.

5. Further, Contractor does not knowingly employ any person who is an unauthorized alien.

6. Further, Contractor has performed an electronic verification check as described above on all workers hired since January 1, 2009 or obtained documents required for completion of a Federal I-9 form before it began participating in E-Verify.

7. Attached to this affidavit is a true and accurate copy of Contractor's Memorandum of Understanding with the United States concerning the use of E-Verify.

I certify under penalty of perjury that the statements above are complete, true and accurate to the best of my knowledge and belief.

Authorized Agent, Partner, Owner or Officer

Henok Tekeste
Printed Name

President
Title

If Contractor has a Human Relations Director or equivalent that person must sign as an affiant as well.

I certify under penalty of perjury that the statements above are complete, true and accurate to the best of my knowledge and belief.

Human Relations Director

Henok Tekeste

Printed Name

President

Title

Subscribed and sworn to before me this 8 day of April, 2020

Lacey Mae Ognibene

Notary Public

My commission expires:

10-10-2020

LACEY MAE OGNIBENE
Notary Public - Notary Seal
STATE OF MISSOURI
Clay County
My Commission Expires: Oct. 10, 2020
Commission #16689642

This form is promulgated pursuant to 15CSR 60-15.020. Use of this form is not required but the Attorney General has deemed this affidavit sufficient in form to satisfy the requirements of section 285.540 RSMo., Supp. 2008.

Company ID Number: 369467

THE E-VERIFY MEMORANDUM OF UNDERSTANDING FOR EMPLOYERS

ARTICLE I
PURPOSE AND AUTHORITY

The parties to this agreement are the Department of Homeland Security (DHS) and the Blue Nile Contractors, Inc. (Employer). The purpose of this agreement is to set forth terms and conditions which the Employer will follow while participating in E-Verify.

E-Verify is a program that electronically confirms an employee's eligibility to work in the United States after completion of Form I-9, Employment Eligibility Verification (Form I-9). This Memorandum of Understanding (MOU) explains certain features of the E-Verify program and describes specific responsibilities of the Employer, the Social Security Administration (SSA), and DHS.

Authority for the E-Verify program is found in Title IV, Subtitle A, of the Illegal Immigration Reform and Immigrant Responsibility Act of 1996 (IIRIRA), Pub. L. 104-208, 110 Stat. 3009, as amended (8 U.S.C. § 1324a note). The Federal Acquisition Regulation (FAR) Subpart 22.18, "Employment Eligibility Verification" and Executive Order 12989, as amended, provide authority for Federal contractors and subcontractors (Federal contractor) to use E-Verify to verify the employment eligibility of certain employees working on Federal contracts.

ARTICLE II
RESPONSIBILITIES

A. RESPONSIBILITIES OF THE EMPLOYER

1. The Employer agrees to display the following notices supplied by DHS in a prominent place that is clearly visible to prospective employees and all employees who are to be verified through the system:

   a. Notice of E-Verify Participation

   b. Notice of Right to Work

2. The Employer agrees to provide to the SSA and DHS the names, titles, addresses, and telephone numbers of the Employer representatives to be contacted about E-Verify. The Employer also agrees to keep such information current by providing updated information to SSA and DHS whenever the representatives' contact information changes.

3. The Employer agrees to grant E-Verify access only to current employees who need E-Verify access. Employers must promptly terminate an employee's E-Verify access if the employer is separated from the company or no longer needs access to E-Verify.

Company ID Number: 369467

Information relating to the Program Administrator(s) for your Company on policy questions or operational problems:

Name	Heather A Smith
Phone Number	(816) 505 - 1302 ext. 200
Fax Number	(816) 505 - 1307
Email Address	heather@bluenilecontractors.com

Company ID Number: 369467

Approved by:

Employer Blue Nile Contractors, Inc.	
Name (Please Type or Print) Wayne Stickler	Title
Signature Electronically Signed	Date 11/03/2010
Department of Homeland Security – Verification Division	
Name (Please Type or Print) USCIS Verification Division	Title
Signature Electronically Signed	Date 11/03/2010

Documentation of Authority to Sign

Complete Section A *or* B, as applicable:

Section A.

I Henok Tekeste certify that I am the Secretary of the corporation named as Contractor herein; that Henok Tekeste who signed this contract on behalf of the Contractor was then president (Title) of said corporation; that said contract was duly signed for and on behalf of the said corporation by authority of its governing body and is within the scope of its corporate powers.

IN WITNESS WHEREOF, I have hereunto affixed my hand and the seal of said corporation this day of April 9, 2020

(Corporate Seal)

Corporate Secretary

Section B.

We hereby certify that the undersigned are the sole owners of the company named as Contractor herein; and hereby attest that _____, who signed this Agreement on behalf of said Contractor, is authorized to legally bind the Contractor to the obligations of this Agreement.

By _____

_____

NOTARIZATION

STATE OF MISSOURI COUNTY OF _____

The foregoing was acknowledged before me this _____ day of _____, _____, by _____.

_____

Notary Public

BID FORM

DILLINGHAM ROAD WATERLINE AND TRAIL PROJECT

LAMP RYNEARSON PROJECT NO. 0319030.02/0320006.02

TABLE OF CONTENTS

Page

ARTICLE 1 – Bid Recipient 1

ARTICLE 2 – Bidder's Acknowledgements 1

ARTICLE 3 – Bidder's Representations 1

ARTICLE 4 – Bidder's Certification 2

ARTICLE 5 – Basis of Bid 3

ARTICLE 6 – Time of Completion 4

ARTICLE 7 – Attachments to this Bid 4

ARTICLE 8 – Bid Submittal 5

Copyright © 2013 National Society of Professional Engineers, American Council of Engineering Companies, and American Society of Civil Engineers. All rights reserved.

ARTICLE 1 – BID RECIPIENT

1.01 This Bid is submitted to:

City of Grain Valley, Missouri
711 Main
Grain Valley, Missouri 64029

1.02 The undersigned Bidder proposes and agrees, if this Bid is accepted, to enter into an Agreement with Owner in the form included in the Bidding Documents to perform all Work as specified or indicated in the Bidding Documents for the prices and within the times indicated in this Bid and in accordance with the other terms and conditions of the Bidding Documents.

ARTICLE 2 – BIDDER'S ACKNOWLEDGEMENTS

2.01 Bidder accepts all of the terms and conditions of the Instructions to Bidders, including without limitation those dealing with the disposition of Bid security. This Bid will remain subject to acceptance for 90 days after the Bid opening, or for such longer period of time that Bidder may agree to in writing upon request of Owner.

ARTICLE 3 – BIDDER'S REPRESENTATIONS

3.01 In submitting this Bid, Bidder represents that:

A. Bidder has examined and carefully studied the Bidding Documents, and any data and reference items identified in the Bidding Documents, and hereby acknowledges receipt of the following Addenda:

Addendum No.	Addendum, Date
01	3/27/20

B. Bidder has visited the Site, conducted a thorough, alert visual examination of the Site and adjacent areas, and become familiar with and satisfied itself as to the general, local, and Site conditions that may affect cost, progress, and performance of the Work.

C. Bidder is familiar with and has satisfied itself as to all Laws and Regulations that may affect cost, progress, and performance of the Work.

D. Bidder has carefully studied all: (1) reports of explorations and tests of subsurface conditions at or adjacent to the Site and all drawings of physical conditions relating to existing surface or subsurface structures at the Site that have been identified in the Supplementary Conditions, especially with respect to Technical Data in such reports and drawings, and (2) reports and drawings relating to Hazardous Environmental Conditions, if any, at or adjacent to the Site that have been identified in the Supplementary Conditions, especially with respect to Technical Data in such reports and drawings.

Copyright © 2013 National Society of Professional Engineers, American Council of Engineering Companies, and American Society of Civil Engineers. All rights reserved.

E. Bidder has considered the information known to Bidder itself; information commonly known to contractors doing business in the locality of the Site; information and observations obtained from visits to the Site; the Bidding Documents; and any Site-related reports and drawings identified in the Bidding Documents, with respect to the effect of such information, observations, and documents on (1) the cost, progress, and performance of the Work; (2) the means, methods, techniques, sequences, and procedures of construction to be employed by Bidder; and (3) Bidder's safety precautions and programs.

F. Bidder agrees, based on the information and observations referred to in the preceding paragraph, that no further examinations, investigations, explorations, tests, studies, or data are necessary for the determination of this Bid for performance of the Work at the price bid and within the times required, and in accordance with the other terms and conditions of the Bidding Documents.

G. Bidder is aware of the general nature of work to be performed by Owner and others at the Site that relates to the Work as indicated in the Bidding Documents.

H. Bidder has given Engineer written notice of all conflicts, errors, ambiguities, or discrepancies that Bidder has discovered in the Bidding Documents and confirms that the written resolution thereof by Engineer is acceptable to Bidder.

I. The Bidding Documents are generally sufficient to indicate and convey understanding of all terms and conditions for the performance and furnishing of the Work.

J. The submission of this Bid constitutes an incontrovertible representation by Bidder that Bidder has complied with every requirement of this Article, and that without exception the Bid and all prices in the Bid are premised upon performing and furnishing the Work required by the Bidding Documents.

ARTICLE 4 – BIDDER'S CERTIFICATION

4.01 Bidder certifies that:

A. This Bid is genuine and not made in the interest of or on behalf of any undisclosed individual or entity and is not submitted in conformity with any collusive agreement or rules of any group, association, organization, or corporation;

B. Bidder has not directly or indirectly induced or solicited any other Bidder to submit a false or sham Bid;

C. Bidder has not solicited or induced any individual or entity to refrain from bidding; and

D. Bidder has not engaged in corrupt, fraudulent, collusive, or coercive practices in competing for the Contract. For the purposes of this Paragraph 4.01.D:

1. "corrupt practice" means the offering, giving, receiving, or soliciting of any thing of value likely to influence the action of a public official in the bidding process;

2. "fraudulent practice" means an intentional misrepresentation of facts made (a) to influence the bidding process to the detriment of Owner, (b) to establish bid prices at artificial non-competitive levels, or (c) to deprive Owner of the benefits of free and open competition;

Copyright © 2013 National Society of Professional Engineers, American Council of Engineering Companies, and American Society of Civil Engineers. All rights reserved.

3. "collusive practice" means a scheme or arrangement between two or more Bidders, with or without the knowledge of Owner, a purpose of which is to establish bid prices at artificial, non-competitive levels; and

4. "coercive practice" means harming or threatening to harm, directly or indirectly, persons or their property to influence their participation in the bidding process or affect the e execution of the Contract.

ARTICLE 5 – BASIS OF BID

5.01 Bidder will complete the Work in accordance with the Contract Documents for the following price(s):

Item No.	Item Description	Unit	Estimated Quantity	Unit Price	Total
1	Mobilization	L.S.	1	7642.21	7642.00
2	Clearing, Grubbing, Demolition	L.S.	1	2480.91	2480.91
3	12" PVC C-900, DR-18	L.F.	1,961	38.99	76,420.11
4	10" PVC C-900, DR-18	L.F.	13	46.76	607.88
5	8" PVC C-900, DR-18	L.F.	70	23.73	1661.10
6	Locator Wire	L.F.	2,044	0.46	940.24
7	12" Gate Valve w/Box	Ea.	5	2140.29	10,701.45
8	8" Gate Valve w/Box	Ea.	1	1105.23	1105.23
9	6" Gate Valve w/Box	Ea.	1	838.13	838.15
10	Fire Hydrant Assembly	Ea.	2	5113.44	10,226.88
11	Remove and Relocate Existing Fire Hydrant	Ea.	1	1764.21	1764.21
12	Waterline Connections - (4)	LS	1	26,222.14	26,222.14
13	Street Repair	S.Y.	72.5	40.09	2906.53
14	Curb and Gutter (CG-2) (Remove and Replace)	L.F.	232	33.44	7758.08
15	4" Asphalt Trail (APWA Type 5 Modified)	S.Y.	1,818	35.18	63,957.24
16	4" Concrete Sidewalk	S.F.	1,143	17.13	19,579.59
17	Sidewalk Ramp with Detectable Warning (6")	S.F.	716	9.53	6837.89
18	Detectable Warning Surface	S.F.	80	29.95	2396.00
19	Inlet (Area) (4'x4')	Ea.	2	3634.39	7268.78
20	Pipe (15" HDPE)	L.F.	112	60.53	6779.36
21	Pipe (15" RCP)	L.F.	12	76.52	918.24
22	Pipe Collar	Ea.	1	1631.59	1631.59
23	Pipe Connection to Existing Structure	Ea.	1	1767.56	1767.56
24	Permanent Pavement Marking (24") (White) (Piano Key)	L.F.	160	21.23	3396.80
25	Seeding, Fertilization and Mulching	Acre	0.94	3687.84	3466.52
26	Erosion Control	LS	1	4229.85	4229.85
27	Traffic Control	LS	1	5643.52	5643.52
28	Construction Staking	LS	1	5408.84	5408.84
29	Force Account (Set)	LS	1	$ 10,000.00	$ 10,000.00
Total of All Unit Price Bid Items					294,556.71

Copyright © 2013 National Society of Professional Engineers, American Council of Engineering Companies, and American Society of Civil Engineers. All rights reserved.

Bidder acknowledges that (1) each Bid Unit Price includes an amount considered by Bidder to be adequate to cover Contractor's overhead and profit for each separately identified item, and (2) estimated quantities are not guaranteed, and are solely for the purpose of comparison of Bids, and final payment for all unit price Bid items will be based on actual quantities, determined as provided in the Contract Documents.

ARTICLE 6 – TIME OF COMPLETION

6.01 Bidder agrees that the Work will be substantially complete on or before September 30, 2020, and will be completed and ready for final payment in accordance with Paragraph 14.10 of the General Conditions on or before October 15, 2020.

6.02 Bidder accepts the provisions of the Agreement as to liquidated damages.

ARTICLE 7 – ATTACHMENTS TO THIS BID

7.01 The following documents are submitted with and made a condition of this Bid:

A. Required Bid security;

B. Bidders Affidavit;

C. E-Verify Affidavit;

D. List of Proposed Subcontractors;

E. List of Proposed Suppliers;

F. List of Project References;

G. Evidence of authority to do business in the state of the Project; or a written covenant to obtain such license within the time for acceptance of Bids;

H. Contractor's License No.: _____ **[or]** Evidence of Bidder's ability to obtain a State Contractor's License and a covenant by Bidder to obtain said license within the time for acceptance of Bids;

I. All manufactured goods or commodities used or supplied under this contract must meet the requirements of the Domestic Products Procurement Law RSMo 34.350 – RSMo 34.359. Compliance certification must be submitted with the bid.

7.02 The terms used in this Bid with initial capital letters have the meanings stated in the Instructions to Bidders, the General Conditions, and the Supplementary Conditions.

Copyright © 2013 National Society of Professional Engineers, American Council of Engineering Companies, and American Society of Civil Engineers. All rights reserved.

ARTICLE 8 – BID SUBMITTAL

BIDDER: *[Indicate correct name of bidding entity]*

Blue Nile Contractors

By:
[Signature] [signature]

[Printed name] Henok Tekeste

(If Bidder is a corporation, a limited liability company, a partnership, or a joint venture, attach evidence of authority to sign.)

Attest:
[Signature] [signature]

[Printed name] Nick Kisner

Title: Estimator

Submittal Date: April 8, 2020

Address for giving notices:

601 Spratley Ave
Birmingham Mo
64761

Telephone Number: 816-505-1302

Fax Number: 816-505-1307

Contact Name and e-mail address: Nick Kisner
nick@bluenilecontractors.com

Bidder's License No.:
(where applicable)

Copyright © 2013 National Society of Professional Engineers, American Council of Engineering Companies, and American Society of Civil Engineers. All rights reserved.

Information for the Dillingham Road Waterline and Trail. Grain Valley Mo. Project 0319030.02 and 0320006.02.

List of Subs:

1. Seal-O-matic (Asphalt paving)
2. Freedom Concrete (concrete flatwork)
3. J&J Survey (staking)
4. Erosion Specialist (erosion control and seeding)

Suppliers for the project:

1. Kc Winwater (pipe and fittings)
2. Barbour Concrete (precast boxes)
3. Morgan Contracting (traffic control and stripping)

References see attached

All goods are made in the USA.

SCHEDULE A

CURRENT EXPERIENCE

Project Name	Owner's Contact Person	Design Engineer	Contract Date	Type of Work	Status	Cost of Work
WMR Northern Ave to Lees Summit	Name: KCMO WSD Address: WSD 63rd St. Telephone: 816-	Name: Company: Wilson & Co. Telephone:	02/19	Water Main		1,315,989
WMR N Troost to N Cleveland	Name: KCMO WSD Address: WSD 63rd St Telephone:	Name: Larkin Lamp Company: Rynearson Telephone:	04/19	Water Main		2,490,686
WMR Wallace Ave to Willow	Name: KCMO WSD Address: WSD 63rd St. Telephone:	Name: DuBois Company: Consultants Telephone:	06/19	Water Main		922,449
2019 Water Main Contract	Name: KC BPU Address: BPU N. 65th St. Telephone:	Name: Board of Company: Public Utilities Telephone:	05/19	Water Main		1,152,686
Wyandotte County Lake Water Main	Name: Unified Government Address: of Wyandotte Co. Telephone:	Name: Wyandotte Co Company: Engineer Telephone:	05/19	Water Main		382,948
WMR Cherry St to Prospect	Name: KCMO WSD Address: WSD 63rd St. Telephone:	Name: Lochner Company: Telephone:	07/19	Water Main		1,394,210
30" Water Transmiss. Main along Blue River Rd	Name: KCMO WSD Address: WSD 63rd St Telephone:	Name: Taliaferro & Browne Company: Telephone:	10/19	Water Main		2,291,737
WMR Randolph to Wallace	KCMO WSD WSD 63rd St.	Lamp Rynearson	1/20	Water Main		2,558,152

Copyright © 2013 National Society of Professional Engineers, American Council of Engineering Companies, and American Society of Civil Engineers. All rights reserved.

SCHEDULE B

PREVIOUS EXPERIENCE (Include ALL Projects Completed within last 5 years)

Project Name	Owner's Contact Person	Design Engineer	Contract Date	Type of Work	Status	Cost of Work
WMR Troost to Kansas	Name: KCMO WSD Address: WSD 63rd St Telephone:	Name: KCMO WSD Company: Telephone:	4/17	Water Main	closed	3,650,000
2018 Water & Sewer Replacement	Name: City of Gladstone Address: Telephone:	Name: Tim Reberg all Company: Telephone:	5/18	Water & Sanitary	closed	800,000
WMR Hickman Mills to Bristol	Name: KCMO WSD Address: WSD 63rd St. Telephone:	Name: KCMO WSD Company: Telephone:	7/17	Water Main	closed	2,000,000
24" Transmission Main 96th & Eastern	Name: KCMO WSD Address: WSD 63rd St. Telephone:	Name: KCMO WSD Company: Telephone:	3/15	Water Main	closed	2,500,000
135th & St. Andrews	Name: KCMO WSD Address: WSD 63rd St. Telephone:	Name: KCMO WSD Company: Telephone:	4/15	Sanitary	closed	1,112,000
WMR Cambridge to Elm	Name: KCMO WSD Address: WSD 63rd St. Telephone:	Name: KCMO WSD Company: Telephone:	7/15	Water Main	closed	2,373,300
WMR Drury to Elm	Name: KCMO WSD Address: WSD 63rd St. Telephone:	Name: KCMO WSD Company: Telephone:	2/17	Water Main	closed	3,700,000

Copyright © 2013 National Society of Professional Engineers, American Council of Engineering Companies, and American Society of Civil Engineers. All rights reserved.

SCHEDULE B

PREVIOUS EXPERIENCE (Include ALL Projects Completed within last 5 years)

Project Name	Owner's Contact Person	Design Engineer	Contract Date	Type of Work	Status	Cost of Work
Wastewater Collections Supp. Workforce	Name: Paul South Address: KCMO water Services Telephone: 816 513 0466	Name: Company: City of KCMO point repairs Telephone:	April 2018	wastewater	closed	2,000,000
MBR Basin Consolidation Outfall DL13	Name: Reza Boonooz Address: KCMO water Services Telephone: 816 513 0309	Name: Company: Shafer, Kline, & Warren Telephone: 913-888-7800	May 2017	Sanitary, Storm, water	closed	6,308,758
BRS area 3 I&I Reduction	Name: Rachelle Lowe Address: Burns & McD. Telephone:	Name: Company: GBA architects, engineers Telephone: 913-492-0400	March 2018	Sanitary	closed	7,102,398
WMR Highland to Hillcrest	Name: Daniel Sullivan Address: KCMO water Services Telephone: 816 513 0454	Name: Company: Burns McDonnell Telephone: 816 333 9400	June 2017	water	closed	4,776,215
WMR Washington to Prospect	Name: Rebecca Mitchell Address: KCMO Water Services Telephone: 816 513 0341	Name: Company: Wilson and Co. Telephone: 816 701 3100	June 2017	water	closed	1,516,643
Manhole Grade Adj.	Name: Khoa Nygen Address: KCMO water Services Telephone: 816 513 0264	Name: Company: Burns McDonnell Telephone: 816 333 9400	Dec 2016	sanitary	closed	5,289,071
Major Storm Sewer	Name: Lauren Garnard Address: Overland Park Public Works Telephone: 913 895 6012	Name: Company: SK Design Group Telephone: 913 451-1818	April 2017	storm	closed	739,561

Copyright © 2013 National Society of Professional Engineers, American Council of Engineering Companies, and American Society of Civil Engineers. All rights reserved.

SCHEDULE B

PREVIOUS EXPERIENCE (Include ALL Projects Completed within last 5 years)

Project Name	Owner's Contact Person	Design Engineer	Contract Date	Type of Work	Status	Cost of Work
Burr Oak Sanitary Sewer Ext.	Name: Woody Fincher Address: 111 Maple St. Telephone: 8163257609	Name: Company: Telephone:	June 2015	sanitary	closed	500,000
New Town Harmony	Name: Jason McCartney Address: 2120 N. 3rd St St. Charles, MO Telephone: 816-325-7600	Name: Company: Telephone:	Dec. 2016	sanitary	closed	1,002,000
36" Liberty Trunk Sanitary Line	Name: Brian Hess Address: 2800 Riverview Rd Liberty, MO Telephone: 816-439-4549	Name: Company: Telephone:	July 2016	sanitary	closed	8,000,000
Independence 2012-2013 sanitary sewer	Name: Woody Fincher Address: 111 Maple St. Indep. MO Telephone: 8163257609	Name: Company: Telephone:	July 2016	sanitary	closed	200, 100
Wastewater collections FY16	Name: Julie Jenson Address: KCMO water Servics Telephone: 8165130466	Name: Company: Telephone:	May 2017	Sanitary	closed	2,000,000
Blue River South 3	Name: Julie Jenson Address: KCMO water Services Telephone: 8165130466	Name: Company: Telephone:	May 2017	Sanitary	closed	500,000
OP KS Major Storm Sewer Repair	Name: Charlie Love Address: OP-Public Works Telephone: 9138956193	Name: Company: Telephone:	Oct. 2015	storm sewer	closed	1,600,000

Copyright © 2013 National Society of Professional Engineers, American Council of Engineering Companies, and American Society of Civil Engineers. All rights reserved.

SCHEDULE B

PREVIOUS EXPERIENCE (Include ALL Projects Completed within last 5 years)

Project Name	Owner's Contact Person	Design Engineer	Contract Date	Type of Work	Status	Cost of Work
Brookside Storm Sewer	Name: Karine Papikian Address: KCMO Water Services Telephone: 8165130300	Name: Company: Telephone:	Dec 2014	storm sewer	closed	4,000,000
58th and North Howard	Name: Tim Nebbergall Address: 7010 N. Holmes Telephone: 816 436 2200	Name: Company: Telephone:	Oct 2014	sanitary	closed	350,000
Manhole Grade Adj.	Name: KCMO Public Works Address: 414 E. 12th St Telephone: 816 513 9970	Name: Company: Telephone:	July 2013	sanitary	closed	245,000
2014 Sewer Rehab	Name: Jerod Letcher Address: UG-Wyco-KCK Telephone: 913-573-5400	Name: Company: Telephone:	NOV 2014	sanitary	closed	250,000
2014 Mill Creek Sewer Rehab	Name: Jerod Letcher Address: UG-Wyco-KCK Telephone: 913-573-5400	Name: Company: Telephone:	Oct 2014	sanitary	closed	250,00
Sewer Manhole Rehab	Name: Tim Nebbergall Address: City of Grandstone Telephone: 816 436 2200	Name: Company: Telephone:	Jan 2013	sanitary	closed	330,557.
Stone Haven Storm Sewer Improvements	Name: Kris Finger Address: Unified Government Telephone: 913-573-5700	Name: Company: Telephone:	March 2017	storm sewer	closed	250,000

Copyright © 2013 National Society of Professional Engineers, American Council of Engineering Companies, and American Society of Civil Engineers. All rights reserved.

SCHEDULE C - LIST OF MAJOR EQUIPMENT AVAILABLE

ITEM	PURCHASE DATE	CONDITION	ACQUIRED VALUE
Komatsu 360	Dec. 2016	good	155,000
Komatsu 490	Dec. 2017	good	275,000
CAT 336	Dec. 2016	good	100,000
CAT 963	March '15	good	315,000
John Deere 350D	June '14	good	300,000
John Deere 350G	March '15	good	315,000
John Deere 210	June 2014	good	225,000
Komatsu WA270	Dec 2016	good	100,000
John Deere 644	April 2017	good	266,000
John Deere 135		good	
Komatsu 138		good	
Komatsu 238		good	
CAT Std steers		good	

Copyright © 2013 National Society of Professional Engineers, American Council of Engineering Companies, and American Society of Civil Engineers. All rights reserved.

LAMP
RYNEARSON

9001 State Line Rd., Ste. 200
Kansas City, MO 64114
[P] 816.361.0440
[F] 816.361.0045
LampRynearson.com

March 27, 2020

City of Grain Valley, MO
Dillingham Road Waterline and Trail Project
Lamp Rynearson Project 0320030.02/0320006.02

CONTRACT BIDDERS:

Enclosed is Addendum No. 1 to the above referenced contract documents. Please execute and attach this Addendum No. 1 to your Bid.

You may contact the undersigned with any questions.

LAMP RYNEARSON

Daniel G. Miller, P.E.
Civil Design Group Leader

Email c: Dick Tuttle, City Engineer

File: L:\Engineering\0319030.02 Grain Valley MO Dillingham Rd Waterline\DOCUMENTS\BID PHASE\ADDENDUMS\Grain Valley Dillingham Road Water and Trail Addendum 1 letter.docx

Bid Date: Wednesday, April 8, 2020 at 2:00 p.m.

City of Grain Valley, Missouri

Dillingham Road Waterline and Trail Project
Lamp Rynearson Project 0319030.02/0320006.02

March 27, 2020
Addendum No. 1

TO ALL PROSPECTIVE BIDDERS:

Informational:

1. The Grain Valley City Hall is closed to the public. Please submit your bid documents in PDF form via email to cityclerk@cityofgrainvalley.org prior to the listed bid date and time. The date and time of receipt of the email will be the official time used to determine responsive bids.

2. The pre bid agenda is attached for bidders that call in to the pre bid meeting by phone.

3. Dillingham Road Waterline and Trail Project Pre bid Meeting and Bid Letting for the City of Grain Valley will be held using gotomeeting only. We will start the each gotomeeting at 2:00, it may take a few minutes for us to get all the bids ready to read. Instructions below:

Pre-Bid Meeting
Tue, Mar 31, 2020 2:00 PM - 3:00 PM (CDT)

Please join my meeting from your computer, tablet or smartphone.
https://www.gotomeet.me/CityofGrainValley/pre-bid-meeting

You can also dial in using your phone.
United States: +1 (872) 240-3412

Access Code: 372-565-341

New to GoToMeeting? Get the app now and be ready when your first meeting starts:
https://global.gotomeeting.com/install/372565341

****

Bid Opening
Wed, Apr 8, 2020 2:00 PM - 3:00 PM (CDT)

Please join my meeting from your computer, tablet or smartphone.
https://www.gotomeet.me/CityofGrainValley/bid-opening

You can also dial in using your phone.
United States: +1 (872) 240-3212

Access Code: 974-671-533

Bid Date: Wednesday, April 8, 2020 at 2:00 p.m.

New to GoToMeeting? Get the app now and be ready when your first meeting starts:
https://global.gotomeeting.com/install/974671533

The undersigned hereby acknowledges receipt of this addendum.

PLEASE ATTACH THIS EXECUTED ADDENDUM TO YOUR BID.

Blue Nile Contractors
Company Name

Signature

Estimator
Title

601 Spratley Ave
Address

Birmingham Mo 64761
City, State, Zip Code

816-505-1302
Phone Number

City of Grain Valley, Missouri

Dillingham Road Waterline and Trail Project
Lamp Rynearson Project 0319030.02/0320006.02

March 31, 2020

I. INTRODUCTIONS

- Dick Tuttle, - City Engineer (816) 847-6200
- Dan Miller – Lamp Rynearson – Consultant Project Manager (816) 823-7228
- Project Observation – City of Grain Valley
- Material Testing – tbd

II. PROJECT SCOPE AND OVERVIEW

- Water Line
  - Water line extends from Pond Ave to Lindenwood
  - Connection at Hedgewood and Pond
  - Water line has received MDNR Construction Permit
- Trail
  - Trail extends from Persimmon to north of Hedgewood
  - ADA ramps at Persimmon and Hedgewood
- Storm Sewer
  - Replacement/extensions to accommodate water line and ditch grading between trail and existing roadway.

III. UTILITY RELOCATION STATUS

- Utilities have plans
- Water line should clear all known utilities, some extra depth is required for possible future road grading along Dillingham as shown on the plans. Extra depth may be required to clear existing waterlines in the Hedgewood area.
- Trail has a conflict with 1 power pole, we will discuss at upcoming utility meeting

IV. GENERAL REQUIREMENTS

- Bid Date – Wed, Apr 8, 2020 2:00 PM - 3:00 PM (CDT). Bid will be held electronically, instructions are here and in addendum 1.
- Project timing and Project Schedule: Substantial completion of all items no later than September 30,2020, and completion of all items by October 15, 2020.
- Insurance and Bonding requirements – (See Instruction to Bidders)
- Review all measurement and payment
- Regular working hours shall be 7:00 AM to 6:00 PM (Monday through Friday) unless otherwise approved
- Please review and be familiar with all of the General Notes on the plans
- Erosion control is required in accordance with NPDES requirements

V. KNOWN ADDENDUM ITEMS

- Addendum 1 with instructions for bid letting procedures.

- Questions

- **Bid Opening**
  Wed, Apr 8, 2020 2:00 PM - 3:00 PM (CDT)

  Please join my meeting from your computer, tablet or smartphone.
  https://www.gotomeet.me/CityofGrainValley/bid-opening

  You can also dial in using your phone.
  United States: +1 (872) 240-3212

  Access Code: 974-671-533

  New to GoToMeeting? Get the app now and be ready when your first meeting starts:
  https://global.gotomeeting.com/install/974671533

LAMP RYNEARSON
9001 State Line Rd., Ste. 200
Kansas City, MO 64114
[P] 816.361.0440
[F] 816.361.0045
LampRynearson.com

Date 4/8/2020

Engineer's Estimate of Probable Construction Costs
Dillingham Road Waterline Project
City of Grain Valley, Missouri

				Engineers Estimate		Blue Nile Contractors		Gunter Construction		SheDigs IT LLC		Redford Construction		Kissick Construction	
Item No.	Item Description	Unit	Estimated Quantity	Unit Price	Total	Unit Price	Total	Unit Price	Total	Unit Price	Total	Unit Price	Total	Unit Price	Total
1	Mobilization	L.S.	1	$ 20,000.00	$ 20,000.00	$ 7,642.00	$ 7,642.00	$ 11,660.00	$ 11,660.00	$ 22,000.00	$ 22,000.00	$ 20,000.00	$ 20,000.00	$ 22,361.00	$ 22,361.00
2	Clearing, Grubbing, Demolition	L.S.	1	$ 20,000.00	$ 20,000.00	$ 2,480.91	$ 2,480.91	$ 27,000.00	$ 27,000.00	$ 2,700.00	$ 2,700.00	$ 10,000.00	$ 10,000.00	$ 16,187.00	$ 16,187.00
3	12" PVC C-900, DR-18	L.F.	1,961	$ 50.00	$ 98,050.00	$ 38.97	$ 76,420.17	$ 36.00	$ 70,596.00	$ 48.00	$ 94,128.00	$ 115.00	$ 225,515.00	$ 59.00	$ 115,699.00
4	10" PVC C-900, DR-18	L.F.	13	$ 50.00	$ 650.00	$ 46.76	$ 607.88	$ 80.00	$ 1,040.00	$ 50.00	$ 650.00	$ 110.00	$ 1,430.00	$ 352.00	$ 4,576.00
5	8" PVC C-900, DR-18	L.F.	70	$ 42.00	$ 2,940.00	$ 23.73	$ 1,661.10	$ 50.00	$ 3,500.00	$ 45.00	$ 3,150.00	$ 100.00	$ 7,000.00	$ 245.00	$ 17,150.00
6	Locator Wire	L.F.	2,044	$ 1.00	$ 2,044.00	$ 0.46	$ 940.24	$ 0.40	$ 817.60	$ 1.00	$ 2,044.00	$ 1.00	$ 2,044.00	$ 1.50	$ 3,066.00
7	12" Gate Valve w/Box	Ea.	5	$ 3,000.00	$ 15,000.00	$ 2,140.29	$ 10,701.45	$ 4,610.00	$ 23,050.00	$ 2,250.00	$ 11,250.00	$ 2,000.00	$ 10,000.00	$ 3,307.00	$ 16,535.00
8	8" Gate Valve w/Box	Ea.	1	$ 1,750.00	$ 1,750.00	$ 1,105.23	$ 1,105.23	$ 3,000.00	$ 3,000.00	$ 1,800.00	$ 1,800.00	$ 1,100.00	$ 1,100.00	$ 2,238.00	$ 2,238.00
9	6" Gate Valve w/Box	Ea.	1	$ 1,500.00	$ 1,500.00	$ 838.15	$ 838.15	$ 2,700.00	$ 2,700.00	$ 900.00	$ 900.00	$ 700.00	$ 700.00	$ 2,032.00	$ 2,032.00
10	Fire Hydrant Assembly	Ea.	2	$ 4,500.00	$ 9,000.00	$ 5,113.44	$ 10,226.88	$ 5,600.00	$ 11,200.00	$ 3,600.00	$ 7,200.00	$ 4,500.00	$ 9,000.00	$ 7,097.00	$ 14,194.00
11	Remove and Relocate Existing Fire Hydrant	Ea.	1	$ 1,500.00	$ 1,500.00	$ 1,764.21	$ 1,764.21	$ 3,500.00	$ 3,500.00	$ 3,000.00	$ 3,000.00	$ 2,500.00	$ 2,500.00	$ 6,026.00	$ 6,026.00
12	Waterline Connections - (4)	LS	1	$ 12,000.00	$ 12,000.00	$ 26,222.14	$ 26,222.14	$ 21,400.00	$ 21,400.00	$ 9,000.00	$ 9,000.00	$ 4,000.00	$ 4,000.00	$ 49,644.00	$ 49,644.00
13	Street Repair	S.Y.	72.5	$ 130.00	$ 9,425.00	$ 40.09	$ 2,906.53	$ 160.00	$ 11,600.00	$ 100.00	$ 7,250.00	$ 80.00	$ 5,800.00	$ 230.00	$ 16,675.00
14	Curb and Gutter (CG-2) (Remove and Replace)	L.F.	232	$ 40.00	$ 9,280.00	$ 33.44	$ 7,758.08	$ 50.00	$ 11,600.00	$ 39.00	$ 9,048.00	$ 40.00	$ 9,280.00	$ 35.00	$ 8,120.00
15	4" Asphalt Trail (APWA Type 5 Modified)	S.Y.	1,818	$ 65.00	$ 118,170.00	$ 35.18	$ 63,957.24	$ 28.00	$ 50,904.00	$ 54.00	$ 98,172.00	$ 38.00	$ 69,084.00	$ 73.00	$ 132,714.00
16	4" Concrete Sidewalk	S.F.	1,143	$ 9.00	$ 10,287.00	$ 17.13	$ 19,579.59	$ 7.00	$ 8,001.00	$ 8.00	$ 9,144.00	$ 9.00	$ 10,287.00	$ 10.00	$ 11,430.00
17	Sidewalk Ramp with Detectable Warning (6")	S.F.	716	$ 16.00	$ 11,456.00	$ 9.55	$ 6,837.80	$ 10.00	$ 7,160.00	$ 11.00	$ 7,876.00	$ 18.00	$ 12,888.00	$ 13.00	$ 9,308.00
18	Detectable Warning Surface	S.F.	80	$ 38.00	$ 3,040.00	$ 29.95	$ 2,396.00	$ 20.00	$ 1,600.00	$ 42.00	$ 3,360.00	$ 30.00	$ 2,400.00	$ 12.00	$ 960.00
19	Inlet (Area) (4'x4')	Ea.	2	$ 4,000.00	$ 8,000.00	$ 3,634.39	$ 7,268.78	$ 5,700.00	$ 11,400.00	$ 4,500.00	$ 9,000.00	$ 4,500.00	$ 9,000.00	$ 4,056.00	$ 8,112.00
20	Pipe (15" HDPE)	L.F.	112	$ 70.00	$ 7,840.00	$ 60.53	$ 6,779.36	$ 58.00	$ 6,496.00	$ 42.00	$ 4,704.00	$ 50.00	$ 5,600.00	$ 68.00	$ 7,616.00
21	Pipe (15" RCP)	L.F.	12	$ 120.00	$ 1,440.00	$ 76.52	$ 918.24	$ 135.00	$ 1,620.00	$ 52.00	$ 624.00	$ 55.00	$ 660.00	$ 162.00	$ 1,944.00
22	Pipe Collar	Ea.	1	$ 1,250.00	$ 1,250.00	$ 1,631.59	$ 1,631.59	$ 810.00	$ 810.00	$ 900.00	$ 900.00	$ 900.00	$ 900.00	$ 3,207.00	$ 3,207.00
23	Pipe Connection to Existing Structure	Ea.	1	$ 1,500.00	$ 1,500.00	$ 1,767.56	$ 1,767.56	$ 1,600.00	$ 1,600.00	$ 500.00	$ 500.00	$ 1,000.00	$ 1,000.00	$ 1,409.00	$ 1,409.00
24	Permanent Pavement Marking (24") (White) (Piano Key)	L.F.	160	$ 20.00	$ 3,200.00	$ 21.23	$ 3,396.80	$ 30.00	$ 4,800.00	$ 13.00	$ 2,080.00	$ 25.00	$ 4,000.00	$ 14.00	$ 2,240.00
25	Seeding, Fertilization and Mulching	Acre	0.94	$ 3,200.00	$ 3,008.00	$ 3,687.84	$ 3,466.57	$ 2,200.00	$ 2,068.00	$ 2,800.00	$ 2,632.00	$ 3,600.00	$ 3,384.00	$ 3,800.00	$ 3,572.00
26	Erosion Control	LS	1	$ 5,000.00	$ 5,000.00	$ 4,229.85	$ 4,229.85	$ 2,900.00	$ 2,900.00	$ 3,500.00	$ 3,500.00	$ 6,000.00	$ 6,000.00	$ 5,624.00	$ 5,624.00
27	Traffic Control	LS	1	$ 2,000.00	$ 2,000.00	$ 5,643.52	$ 5,643.52	$ 2,750.00	$ 2,750.00	$ 7,750.00	$ 7,750.00	$ 10,000.00	$ 10,000.00	$ 11,400.00	$ 11,400.00
28	Construction Staking	LS	1	$ 6,500.00	$ 6,500.00	$ 5,408.84	$ 5,408.84	$ 4,840.00	$ 4,840.00	$ 5,300.00	$ 5,300.00	$ 8,000.00	$ 8,000.00	$ 10,687.00	$ 10,687.00
29	Force Account (Set)	LS	1	$ 10,000.00	$ 10,000.00	$ 10,000.00	$ 10,000.00	$ 10,000.00	$ 10,000.00	$ 10,000.00	$ 10,000.00	$ 10,000.00	$ 10,000.00	$ 10,000.00	$ 10,000.00
Total of All Unit Price Bid Items					$ 395,830.00		$ 294,556.70		$ 319,612.60		$ 339,662.00		$ 461,572.00		$ 514,726.00
						Difference between Bid Tab	$ 0.01	Difference between Bid Tab	$ -	Difference between Bid Tab Line No. 7	$ 250.00	Difference between Bid Tab	$ -	Difference between Bid Tab	$ -

From: Nick Kisner <nick@bluenilecontractors.com>
Sent: Monday, April 13, 2020 9:17 AM
To: Dan Miller
Subject: Re: Dillingham Rd

[EXTERNAL EMAIL]
Seal-o-Matic $32,035.00. 11%
Freedom Concrete $21,082.00. 7%
J&J $4840.00. 1.6%
Erosion Specialist $6887.00. 2.3%
Total is $64,844.00 22%
Let me know if you need anything else. Thanks
Get Outlook for Android

Dan Miller, P.E.
Civil Design Group Leader

[D] 816.823.7228 [C] 816.804.1230 [A] 9001 State Line Rd., Ste. 200, Kansas City,

Item No.	Item Description	Cost Split Total Bid Price	CD Share	Parks Share	Comm Develop 600-60-78940	Parks 200-22-78780
1	Mobilization	$ 7,642.00	50%	50%	$ 3,821.00	$ 3,821.00
2	Clearing, Grubbing & Demolition	$ 2,480.91	50%	50%	$ 1,240.46	$ 1,240.45
3	12" PVC C-900, DR-18	$ 76,420.17	100%	0%	$ 76,420.17	$ -
4	10" PVC C-900, DR-18	$ 607.88	100%	0%	$ 607.88	$ -
5	8" PVC C-900, DR-18	$ 1,661.10	100%	0%	$ 1,661.10	$ -
6	Locator Wire	$ 940.24	100%	0%	$ 940.24	$ -
7	12" Gate Valve w/box	$ 10,701.45	100%	0%	$ 10,701.45	$ -
8	8" Gate Valve w/box	$ 1,105.23	100%	0%	$ 1,105.23	$ -
9	6" GateValve w/box	$ 838.15	100%	0%	$ 838.15	$ -
10	Fire Hydrant Assembly	$ 10,226.88	100%	0%	$ 10,226.88	$ -
11	Remove & Relocate Existing Fire Hydrant	$ 1,764.21	100%	0%	$ 1,764.21	$ -
12	Water Line Connections-(4)	$ 26,222.14	100%	0%	$ 26,222.14	$ -
13	Street Repair	$ 2,906.53	100%	0%	$ 2,906.53	$ -
14	Curb & Gutter Remove & Replace	$ 7,758.08	50%	50%	$ 3,879.04	$ 3,879.04
15	4" Asphalt Trail (APWA Type 5 Modified)	$ 63,957.24	0%	100%	$ -	$ 63,957.24
16	4" Concrete Sidewalk	$ 19,579.59	0%	100%	$ -	$ 19,579.59
17	Sidewalk Ramp w/Detectible Warning (6")	$ 6,837.80	0%	100%	$ -	$ 6,837.80
18	Detectable Warning Surface	$ 2,396.00	0%	100%	$ -	$ 2,396.00
19	Inlet (Area) (4'X4')	$ 7,268.78	0%	100%	$ -	$ 7,268.78
20	Pipe (15" HDPE)	$ 6,779.36	0%	100%	$ -	$ 6,779.36
21	Pipe (15" RCP)	$ 918.24	0%	100%	$ -	$ 918.24
22	Pipe Collar	$ 1,631.59	0%	100%	$ -	$ 1,631.59
23	Pipe Connection to Existing Structure	$ 1,767.56	0%	100%	$ -	$ 1,767.56
24	Permanent Pavement Marking (24") (White) (Piano Key)	$ 3,396.80	0%	100%	$ -	$ 3,396.80
25	Seeding,Fertilization, & Mulching	$ 3,466.57	50%	50%	$ 1,733.280	$ 1,733.290
26	Erosion Control	$ 4,229.85	50%	50%	$ 2,114.93	$ 2,114.92
27	Traffic Control	$ 5,643.52	50%	50%	$ 2,821.76	$ 2,821.76
28	Construction Staking	$ 5,408.84	50%	50%	$ 2,704.42	$ 2,704.42
29	Force Account (Set)	$ 10,000.00	50%	50%	$ 5,000.00	$ 5,000.00
		$ 294,556.71			$ 156,708.87	$ 137,847.84

INTENTIONALLY LEFT BLANK

CITY OF GRAIN VALLEY BOARD OF ALDERMEN AGENDA ITEM		
MEETING DATE	04/27/2020	
BILL NUMBER	R20-28	
AGENDA TITLE	**A RESOLUTION AUTHORIZING THE CITY ADMINISTRATOR TO APPROVE THE MIDWEST PUBLIC RISK (MPR) 2020-2021 PLAN ELECTIONS AND RATES FOR EMPLOYEE HEALTH, DENTAL AND VISION BENEFIT COVERAGE**	
REQUESTING DEPARTMENT	Administration	
PRESENTER	Ken Murphy, City Administrator	
FISCAL INFORMATION	Cost as recommended:	3 & 4 Q 20 / 1 & 2 Q 21 $347,458 / $347,458 (61540) $20,274 / $20,274 (61560)
	Budget Line Item:	All Funds/Departments: 61540: Health 61560: Dental
	Balance Available	3 & 4 Q 20 / 1 & 2 Q 21 $372,128 / N/A (61540) $21,038 / N/A (61560)
	New Appropriation Required:	[ ] Yes [X] No
PURPOSE	To provide health, dental and vision insurance coverage to City of Grain Valley employees and their families	

BACKGROUND	On June 5, 2017, the Board of Aldermen authorized the City Administrator to enter into an agreement with MPR for employee health, dental and vision benefit coverage. On April 23, 2018, the Board of Aldermen authorized the City Administrator to provide 100% health and dental premium rate coverage for each eligible employee and 65% of remaining health and dental premium coverage for employee dependents.
SPECIAL NOTES	The 2020 fiscal year budget included a 15% increase to the 2020 3rd and 4th quarter benefit premium rates. MPR experienced an 5.8% increase to the Open Access and 4.8% to the Choice Fund 2020-2021 premium rates. Due to the city's exposure experience, the City received a **1% discount** to the increased premiums. The Open Access plan increased 4.8% and the Choice Fund plan increased 3.8% premium rates for the (2020) 3rd and 4th quarter and the (2021) 1st and 2nd quarter benefit plan period. The premium rates for dental and vision were rounded up to the nearest whole dollar by MPR.
ANALYSIS	The City can absorb the increased 3rd and 4th quarter premiums into the 2020 approved budget.
PUBLIC INFORMATION PROCESS	None
BOARD OR COMMISSION RECOMMENDATION	None
DEPARTMENT RECOMMENDATION	Staff Recommends Approval
REFERENCE DOCUMENTS ATTACHED	Resolution, MPR Memo & 2020-2021 Health, Dental & Vision Rates

CITY OF GRAIN VALLEY **STATE OF MISSOURI**

April 27, 2020

RESOLUTION NUMBER
R20-28

A RESOLUTION AUTHORIZING THE CITY ADMINISTRATOR TO APPROVE THE MIDWEST PUBLIC RISK (MPR) 2020-2021 PLAN ELECTIONS AND RATES FOR EMPLOYEE HEALTH, DENTAL AND VISION BENEFIT COVERAGE

WHEREAS, the City of Grain Valley is interested in retaining the most qualified individuals as employees of the City; and

WHEREAS, the Board of Aldermen recognizes that in order to attract qualified applicants, the City must provide a competitive employee benefits package; and

WHEREAS, the City of Grain Valley is committed to providing its employees with comprehensive health, dental and vision coverage.

NOW THEREFORE, BE IT RESOLVED by the Board of Aldermen of the City of Grain Valley, Missouri as follows:

SECTION 1: The City Administrator is hereby authorized to approve the MPR Cigna Open Access – 1500 health plan with the following premium rates, as quoted:

CIGNA CHOICE FUND –1500 JULY 1, 2020 – JUNE 30, 2021	
Coverage Type	*Monthly Premium Rates*
Employee Only	$598.00
Employee/Spouse	$1,434.00
Employee/Child	$1,194.00
Family	$1,672.00

SECTION 2: The City Administrator is hereby authorized to approve the MPR Cigna Open Access – 1500 health plan with the following premium rates, as quoted:

CIGNA OPEN ACCESS –1500 JULY 1, 2020 – JUNE 30, 2021	
Coverage Type	*Monthly Premium Rates*
Employee Only	$756.00
Employee/Spouse	$1,812.00
Employee/Child	$1,510.00

Family	$2,116.00

SECTION 3: The City Administrator is hereby authorized to approve the MPR Delta Dental 1250 plan with the following premium rates, as quoted:

DELTA DENTAL OF MISSOURI DENTAL 1250 JULY 1, 2020 – JUNE 30, 2021	
Coverage Type	*Monthly Premium Rates*
Employee Only	$36.00
Employee/Spouse	$88.00
Employee/Child	$88.00
Family	$88.00

SECTION 4: The City Administrator is hereby authorized to approve the MPR VSP Vision 1 plan with the following premium rates at no cost to the City, as quoted:

VSP VISION 1 JULY 1, 2020 – JUNE 30, 2021	
Coverage Type	*Monthly Premium Rates*
Employee Only	$8.00
Employee/Spouse	$16.00
Employee/Child	$16.00
Family	$22.00

SECTION 4: Approval will be for the 2020-2021 benefit plan year beginning July 1, 2020 and ending June 30, 2021.

PASSED and APPROVED, via voice vote, (__-__) this 27th Day of April, 2020.

_____

Mike Todd
Mayor

ATTEST:

_____

Jamie Logan
City Clerk

Midwest Public Risk
19400 East Valley View Parkway
Independence, MO 64055

TO: Employee Benefits Member Representatives

FROM: Terry W. Norwood, President/CEO

DATE: March 19, 2020

RE: Contribution Rates for July 1, 2020 through June 30, 2021

It is my responsibility to report to you the funding requirement and health benefit contribution rate for FY 2020-21. *The actual rate for your entity calculated based on the overall experience of the plans that you selected and in a small part your individual experience.*

City of Grain Valley, MO:

Current Medical Plan	% Increase
OAP 1500	4.80%
Choice Fund 1500	3.80%

Priority emphasis was again placed on maintaining the current benefit levels. To that goal, you will find minimal benefit changes to the plans. Your participation in our pool continues to be our greatest strength.

Each year a review of the benefits structure and pricing is undertaken to assure that the program remains competitive and pricing can support the program. The process for this year involved the Board of Directors, the Benefits Advisory Committee and staff.

Staff developed a set of recommendations which were brought before the Board for consideration. The plan changes requested closely mirror and reflect the health, dental and vision plans that are commonly available in the marketplace.

Changes for July 1, 2020

In Network Only Plans 1 & 2:

- None

In Network Only Plan 3 (500) and INO (3) 500 Surefit Option:

- Reduce Specialist copay from $60 to $45

Cigna Copay/Open Access Plans:

- No changes

Cigna Choice Fund Plans:

- No changes

Prescription Drug Plans

- Move Pharmacy to CVS/Caremark

Dental Plan(s)

- 0% Increase, no plan changes

Vision Plan(s)

- 0% Increase, no plan change

The Employee Benefits staff will follow up this notice with specific details, instructions and materials. Materials for open enrollment will be available in early April. If you decide to change your plan offerings, please notify MPR as soon as possible.

For your reference, I have included the last seven years of increases for the Employee Health Pool below. We greatly appreciate your continued support of Midwest Public Risk.

Respectfully,

Terry W. Norwood, CEO

Plan Year	Copay Plan Options	HDHP Plan Options
Seven Year Average	8%	7%
2020-2021	5.8%	4.8%
2019-2020	18.5%	21.5%
2018- 2019	10.6%	9.9%
2017 - 2018	5.3%	4%
2016 – 2017	5.2%	2.4%
2015 – 2016	4.5%	3.5%
2014 – 2015	6.9%	3%

INTENTIONALLY LEFT BLANK

Staff/ Committee Reports

INTENTIONALLY LEFT BLANK

Grain Valley, Missouri
Come Home To Opportunity

Community Development
Mark Trosen, Director

Board of Aldermen Report
April 13, 2020

(For the Month of March)

Permits Issued – 60; YTD 116

NSFR – 12; YTD 25
Commercial Other – 3; YTD 5
Residential other – 14; YTD 30
Fence – 15; YTD 23
Roof -9; YTD 15
Demo – 0; YTD 1
Right-of-Way – 3; YTD 7
Construction – 2; YTD 2
Planning/Zoning – 2; YTD 8

Codes Enforcement & Inspections – 297; YTD 512

Total Building Inspections – 160; YTD 465
- Residential – 124; YTD 390
- Commercial – 4; YTD 31
- Misc. Stops- 32; YTD 44

Code Violation Inspections – 21; YTD 180
- New – 21; YTD 155
- Closed- 0; YTD 25

Utility Inspections – 32; YTD 80
- Sewer – 5; YTD 15
- Water – 3; YTD 4
- Sidewalks – 3; YTD 12
- Driveways – 14; YTD 29
- PW Finals – 7; YTD 20

Public Works

Work Orders Completed – 196; YTD 540
Utility Locate Requests – 283; YTD 710
Water Main Taps – 6; YTD 45
Water Meters –
- New Construction Install – 14; YTD 33
- Repairs – 9; YTD 19
- Replacement – 2; YTD 7
- Meter Replacement Program – 176; YTD 176 (Budgeted for 400 meters)

Additional Items

Storm drain clean out at multiple locations to prevent flooding issues with spring rains

Street repair complete at Main St/Eagles Pkwy from water main break in Jan.

Pothole repair throughout the city using 11 tons cold patch.

2020 Hydrant Inspection Program underway. Do date, 101 hydrants have been inspected.

2020 Meter Replacement Program underway.

INTENTIONALLY LEFT BLANK

Grain Valley, Missouri
Come Home To Opportunity

Community Development
Mark Trosen, Director

Board of Aldermen Report
April 27, 2020

(For the Month of March)

Permits Issued – 60; YTD 116

NSFR – 12; YTD 25
Commercial Other – 3; YTD 5
Residential other – 14; YTD 30
Fence – 15; YTD 23
Roof -9; YTD 15
Demo – 0; YTD 1
Right-of-Way – 3; YTD 7
Construction – 2; YTD 2
Planning/Zoning – 2; YTD 8

Codes Enforcement & Inspections – 297; YTD 512

Total Building Inspections – 160; YTD 465
- Residential – 124; YTD 390
- Commercial – 4; YTD 31
- Misc. Stops- 32; YTD 44

Code Violation Inspections – 21; YTD 180
- New – 21; YTD 155
- Closed- 0; YTD 25

Utility Inspections – 32; YTD 80
- Sewer – 5; YTD 15
- Water – 3; YTD 4
- Sidewalks – 3; YTD 12
- Driveways – 14; YTD 29
- PW Finals – 7; YTD 20

Public Works

Work Orders Completed – 196; YTD 540
Utility Locate Requests – 283; YTD 710
Water Main Taps – 6; YTD 45
Water Meters –
- New Construction Install – 14; YTD 33
- Repairs – 9; YTD 19
- Replacement – 2; YTD 7
- Meter Replacement Program – 176; YTD 176 (Budgeted for 400 meters)

Additional Items

Storm drain clean out at multiple locations to prevent flooding issues with spring rains

Street repair complete at Main St/Eagles Pkwy from water main break in Jan.

Pothole repair throughout the city using 11 tons cold patch.

2020 Hydrant Inspection Program underway.

2020 Meter Replacement Program underway.

INTENTIONALLY LEFT BLANK

MUNICIPAL DIVISION SUMMARY REPORTING FORM

Refer to instructions for directions and term definitions. Complete a report each month even if there has not been any court activity

I. COURT INFORMATION	Contact information same as last report ☐	
	Municipality: GRAIN VALLEY	Reporting Period: March, 2020
Mailing Address: 711 MAIN	Software Vendor: Tyler Technologies	
Physical Address: 711 MAIN	County JACKSON	Circuit: 16
Telephone Number: (816) 847-6240	Fax Number: (816) 847-6209	
Prepared By: Kari Boardman	E-mail Address kboardman@cityofgrainvalley.or	iNotes ☐
Municipal Judge(s): SUSAN WATKINS	Prosecuting Attorney: JEREMY COVER	

II. MONTHLY CASELOAD INFORMATION	Alcohol & Drug related Traffic	Other Traffic	Non-Traffic Ordinance
A. Cases *(citations / informations)* pending at start of month	128	1,701	291
B. Cases *(citations / informations)* filed	19	46	21
C. Cases *(citations / informations)* disposed			
1. jury trial *(Springfield, Jefferson County, and St. Louis County only)*	0	0	0
2. court / bench trial - GUILTY	0	0	0
3. court / bench trial - NOT GUILTY	0	0	0
4. plea of GUILTY in court	5	22	3
5. Violations Bureau Citations *(i.e., written plea of guilty)* and bond forfeitures by court order *(as payment of fines / costs)*	0	12	0
6. dismissed by court	2	4	3
7. *nolle prosequi*	0	0	0
8. certified for jury trial *(not heard in the Municipal Division)*	0	0	0
9. **TOTAL CASE DISPOSITIONS**	7	38	6
D. Cases (citations / informations) pending at end of month [pending caseload = (A + B) - C9]	140	1,709	306
E. Trial de Novo and / or appeal applications filed	0	0	0

III. WARRANT INFORMATION *(pre- & post-disposition)*	
1. # Issued during reporting period	20
2. # Served/withdrawn during reporting period	19
3. # Outstanding at end of reporting period	383

IV. PARKING TICKETS	
# Issued during period	0
☐ Court staff does not process parking tickets	

MUNICIPAL DIVISION SUMMARY REPORTING FORM

I. COURT INFORMATION	Municipality: GRAIN VALLEY	Reporting Period: March, 2020

V. DISBURSEMENTS

Excess Revenue (minor traffic and municipal ordinance violations, subject to the excess revenue percentage limitation)		Other Disbursements cont.	
Fines - Excess Revenue	$ 2,365.00	EQUIPMENT REIMB DWI	$ 39.50
Clerk Fee - Excess Revenue	$ 240.00		$
Crime Victims Compensation (CVC) Fund surcharge - Paid to City/Excess Revenue	$ 7.40		$
Bond forfeitures (paid to city) - Excess Revenue	$ 0.00		$
Total Excess Revenue	$ 2,612.40		$
Other Revenue (non-minor traffic and ordinance violations not subject to the excess revenue percentage limitation)			$
Fines - Other	$ 3,318.77		$
Clerk Fee - Other	$ 336.00		$
Judicial Education Fund (JEF) ☒ Court does not retain funds for JEF	$ 0.00		$
Peace Officer Standard and Training (POST) Commission surcharge	$ 48.00		$
Crime Victims Compensation (CVC) Fund surcharge - Paid to State	$ 342.24		$
Crime Victims Compensation (CVC) Fund surcharge - Paid to City/Other	$ 10.36		$
Law Enforcement Training (LET) Fund surcharge	$ 96.00		$
Domestic Violence Shelter surcharge	$ 192.00		$
Inmate Prisoner Detainee Security Fund surcharge	$ 0.00		$
Sheriff's Retirement Fund (SRF) surcharge	$ 141.73		$
Restitution	$ 450.00		$
Parking ticket revenue *(including penalties)*	$ 0.00		$
Bond forfeitures *(paid to city)* - Other	$ 0.00		$
Total Other Revenue	$ 4,935.10	**Total Other Disbursements**	$ 145.50
Other Disbursements: Enter below additional surcharges and/or fees not listed above. Designate if subject to the excess revenue percentage limitation. Examples include, but are not limited to, arrest costs, witness fees, and board bill/jail costs.		**Total Disbursements of Costs, Fees, Surcharges and Bonds Forfeited**	$ 7,693.00
INCARCERATION REIMBURSEMENT	$ 45.00	**Bond Refunds**	$ 1,191.00
OFFICER REIMBURSEMENT DWI	$ 61.00	**Total Disbursements**	$ 8,884.00

GRAIN VALLEY PARK BOARD
MINUTES
February 11, 2020

Meeting called to order at 7:12 P.M. by President Brad Welle.

ROLL CALL:

PRESENT: Brad Welle (President), Brian Bray (Vice President), Becky Gray (Secretary), Norm Combs, Don Caslavka, Jared English, Terry Hill, Chuck Harris, Alderman Jayci Stratton, Shannon Davies (Director)

ABSENT: Nathan Hays

CONSENT AGENDA:

a. **APPROVAL OF MINUTES:** Motion by Jared English and seconded by Norm Combs to approve the November Minutes. Motion carried.

TREASURER'S REPORT:

a. **REVIEW OF ACCOUNTS PAYABLE/EXPENDITURES/REVENUES:** Shannon highlighted and explained the more notable expenditures, which included lumber purchased for replacing the Monkey Mountain shelter roof and annual conference registration fees for staff. Year-to-date revenues/expenses were also reviewed.

CITIZEN COMMENTS: none

COMMITTEE REPORTS:

a. **Veteran's Tribute –** Norm Combs/Mike Switzer
   i. The POH Committee would like to have a dedication event to the Parks and Recreation Department on May 6th at the site. Mike stated that they would like to coordinate with the Park Board to help plan for the event. The next POH meeting is February 26th.

OLD BUSINESS:

a. **Cross Creek Trail Project** – Shannon Davies
   i. Park Maintenance has installed the trailhead gates and dog waste stations.
   ii. Trailhead entrance signage will be installed in the next 1-2 weeks.
   iii. Craig Gump is providing the survey work to get the Legal Description of the trail property so that we can get that designated as a city easement.
   iv. CFS Engineers is continuing their work for the pedestrian bridge design/scope as well as acquisition of the necessary permitting.

b. **Dillingham Connector Trail Project Update** – Shannon Davies
   i. Staff have met with Lamp Rynearson and they are developing the Scope for this project to be put out for bid this Spring.
   ii. This project not only includes the construction of a trail that will connect to existing trail at Persimmon Drive and just north of Hedgewood Drive but it also includes the construction of a new waterline that will run parallel to the trail.

c. **Trails Master Plan Review** – Group Discussion
   i. The updated Trail Master Plan Aerial was provided to the board for the last review. No further changes needed.

d. **Capital Improvements Plan (CIP) 2020-2024** – Shannon Davies
   i. Shannon stated that he is working with the City Engineer on both the park projects as well as the public works projects. Timing is to have the CIP completed before the end of April.

e. **Community Campus Planning** – Shannon Davies
   i. There is another Community Forum regarding this project/bond issue slated for March 12th at 6pm at Stony Point Elementary. Further updates/details will be provided with opportunity for residents to ask questions.

NEW BUSINESS:

a. **Park Board By-Laws – Residency Review** – Group Discussion
   i. There was discussion about this board amending the by-laws to include allowing individuals who either live outside city limits but within school district boundaries, the opportunity to serve on the park board. There was also discussion about allowing the same for someone who works within the city but lives outside city boundaries.
   ii. There is no state statute that requires park board members to live within the city limits of the board they serve on.
   iii. There are also several other areas in our by-laws that need to be updated. Those were discussed and will be changed before the next meeting for review.
   iv. Further discussion on this is needed.

b. **Park Ordinance "Sale of Services/Merchandise" Review** – Group Discussion
   i. Shannon stated that we do have groups approach us wanting to sell goods as a fundraiser in conjunction with their indoor or outdoor rental. Park Code prohibits this. In some cases, these groups go above us to the Board of Aldermen seeking approval.
   ii. Park Code currently states that these groups shall go before the Park Board to get this ordinance waived for the event. Too often the "event date" is going to occur before the next park board meeting making it hard to try and get the ordinance waived.

iii. Shannon stated that for anything other than the annual fair or city-sponsored events, we should not be waiving this ordinance. He stated that in the spirit of this ordinance, people should not be profiting off of our taxpayers and as soon as we let one group sell goods, it is setting a precedent for others wanting to do the same. The city-sponsored events are specifically for the community and are not profit-based.

iv. Shannon would like to re-draft the ordinance to grant the Director authorization to deny the waiving of this ordinance instead of it going to the Park Board, mirroring what Blue Springs Parks & Recreation currently does.

v. The board asked Shannon to draft the ordinance language and bring it back to the next meeting for review.

DIRECTOR'S REPORT

1. **Operational Updates**
   a. We are currently working through the list of capital items budgeted for 2020 and making those purchases/improvements as timing dictates.

2. **City Updates**
   a. Staff provided facility tours on January 30th for residents who were interested. The focus of the tours was to show people the existing state of City Hall, Police Station and Community Center with regard to current space limitations and repair needs.
   b. On February 3rd, the City held a Community Campus Open House for residents at council chambers.
   c. A Community Campus Public Forum is scheduled for March 12th at Stony Point Elementary.
   d. Current April Election Filings:
      i. Ward 1: Jayci Stratton
      ii. Ward 2: Joey Burgett, Rick Knox
      iii. Ward 3: Bob Headley
      iv. Mayor: Mike Todd, Chuck Johnston, Jeff Craney

3. **Past/Current Programs/Special Events**
   a. Holiday Fitness Membership Special - (12/1 – 1/31)
   b. Home-School P.E.
   c. Tot Time – Weekly while school is in session.
   d. Mini Munchkins (Winter Wonderland) - 1/9
   e. Princess Party – 1/18
   f. Petite Picassos – 1/28
   g. Father-Daughter Valentine Dance – 2/1

4. **Upcoming Programs/Special Events**
   a. Painting Party – 2/11
   b. Senior Luncheon – 2/12
   c. Spring Karate – 2/18 thru 4/13

d. Homeschool P.E. – 2/19 thru 3/25

TOPICS FOR NEXT MEETING:

a. Cross Creek Park Trail Project
b. Trails Master Plan Review
c. Capital Improvements Plan (CIP) 2020-2024
d. Community Campus Planning
e. Dillingham Trail Connector Project
f. Park Board By-Laws Review
g. "Sale of Merchandise/Services" Ordinance

ADJOURNMENT:

Motion by Norm Combs, seconded by Chuck Harris, to adjourn. Motion carried.

Meeting adjourned at 8:37 P.M.

Next regular meeting will be March 30, 2020.